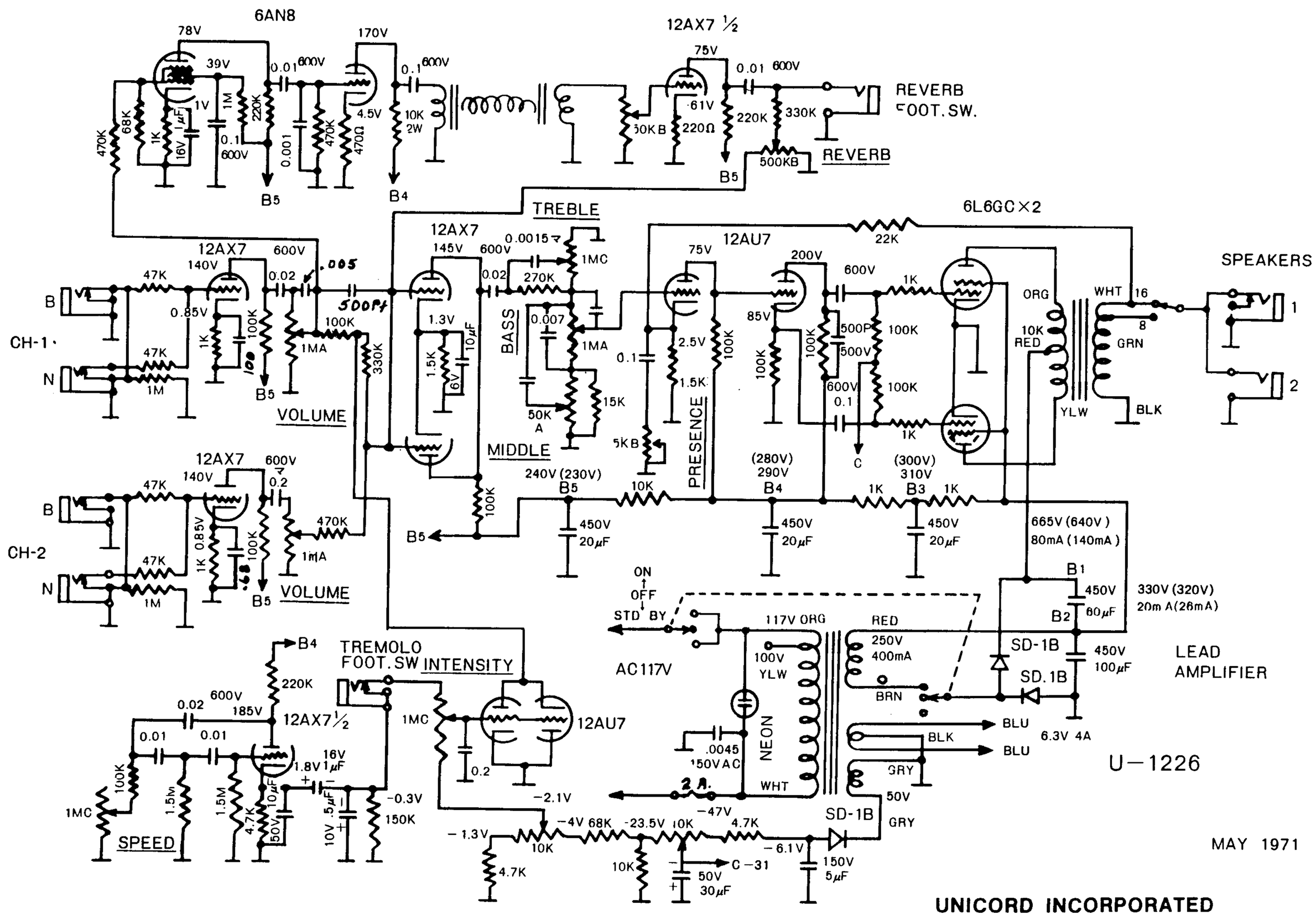
6AN8
12AX7 ½
REVERB FOOT. SW.
REVERB
TREBLE
BASS
MIDDLE
PRESENCE
VOLUME
CH-1
CH-2
12AX7
12AU7
6L6GC×2
SPEAKERS
TREMOLO FOOT. SW
INTENSITY
12AX7½
SPEED
AC117V
ON
OFF
STD BY
NEON
SD-1B
LEAD AMPLIFIER
U-1226
MAY 1971
UNICORD INCORPORATED
A GULF + WESTERN COMPANY