UNITED TRANSFORMER CORPORATION

150 VARICK STREET, NEW YORK 13, N. Y.

RECOMMENDED VACUUM TUBE AMPLIFIER CIRCUIT PROVIDING 50 WATTS

± 1 db 40 cycles to 10 KC . . .
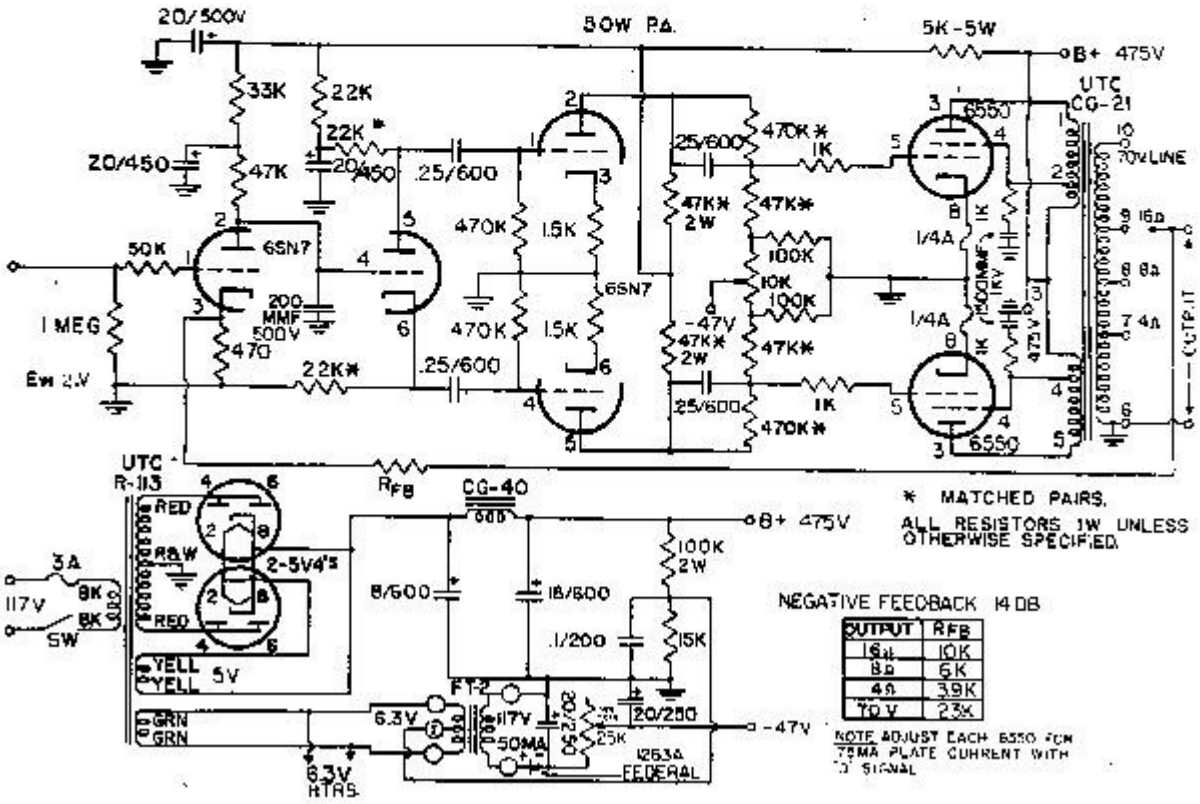
At 1 watt, ± 1 db 20 cycles to 20 KC.