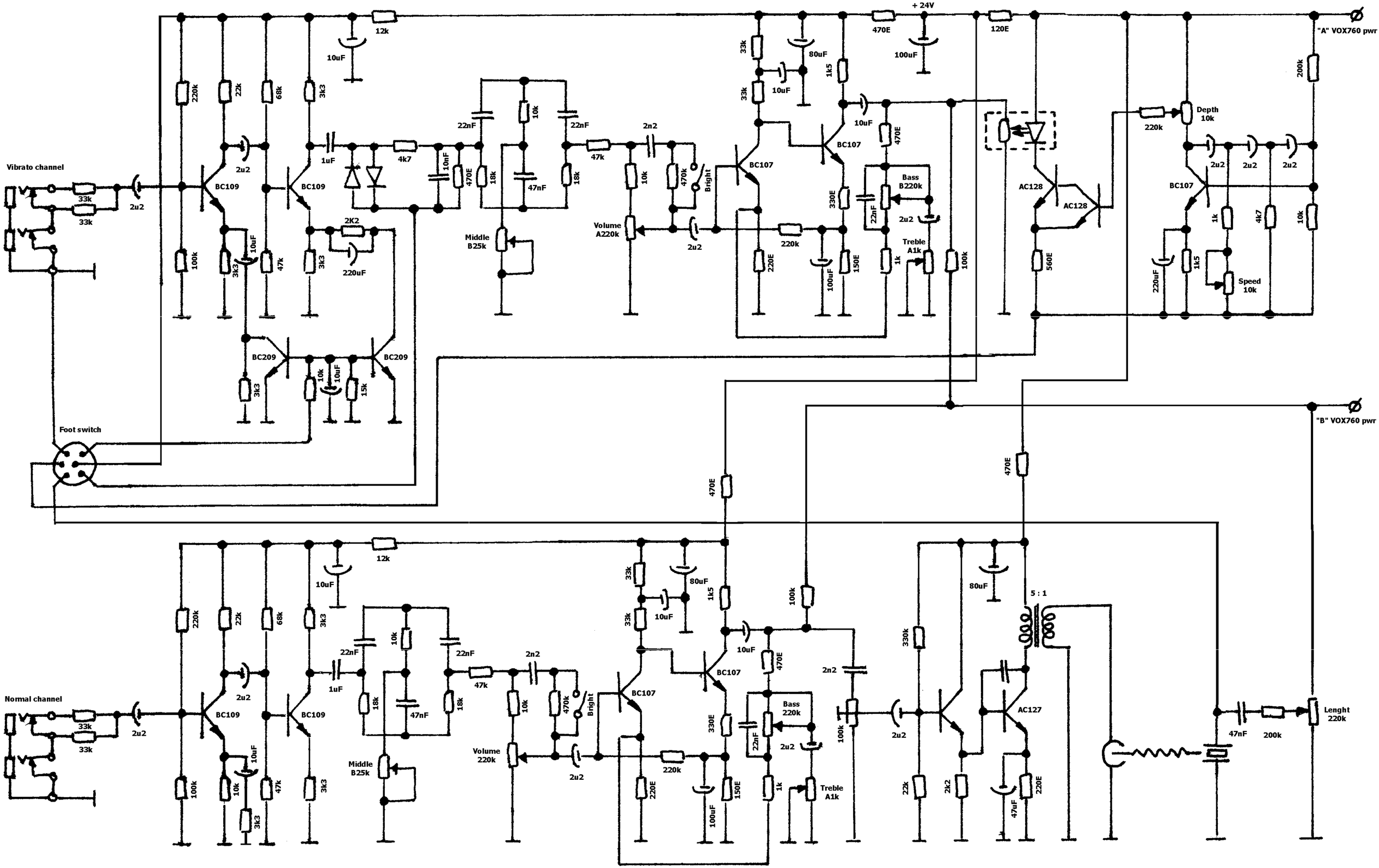

Rare & Vintage Kiki Custom & Service
Sound Engineering

VOX 760 preamp

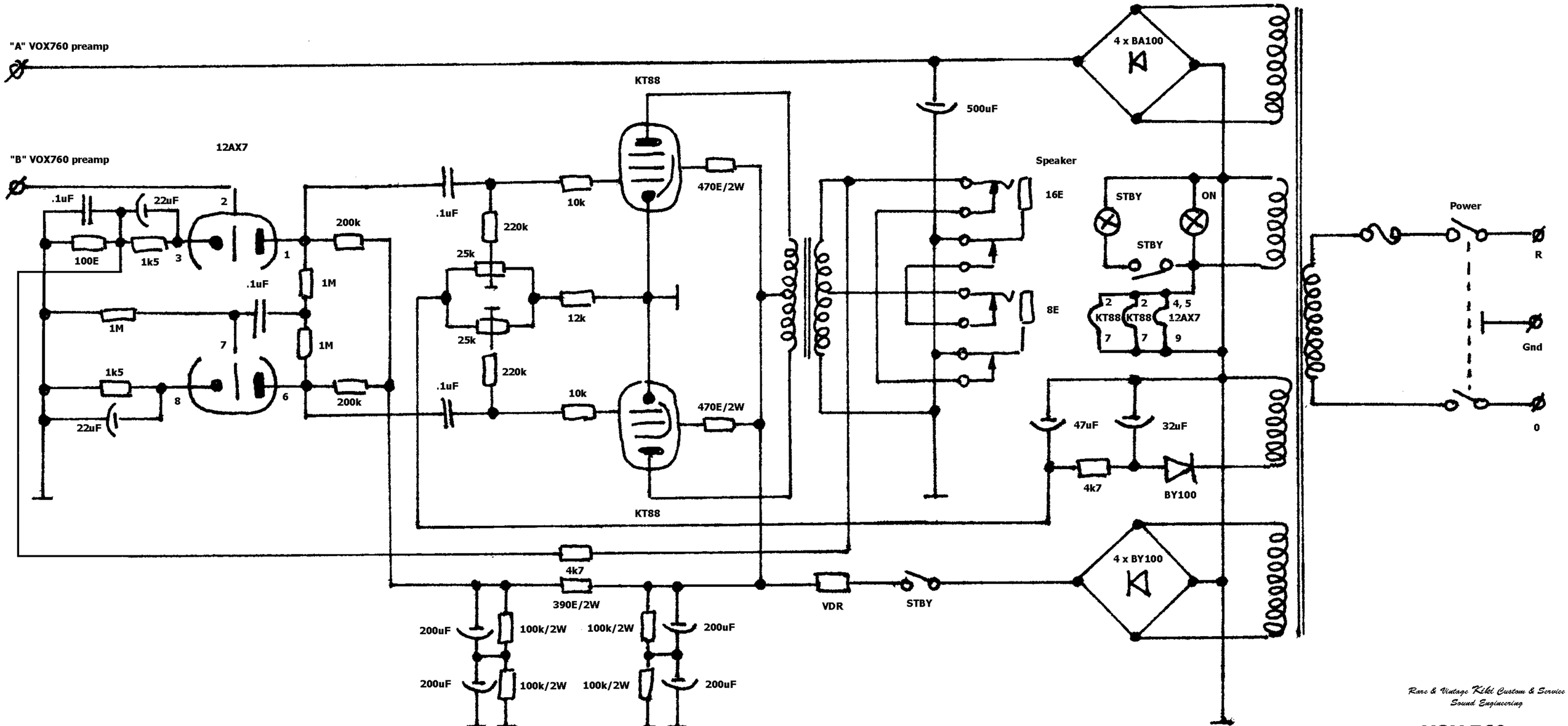

Rare & Vintage Kibel Custom & Service
Sound Engineering

VOX 760 pwr