NO. V-1-5

VOX AC-15 AMPLIFIER

AMERICAN TUBE NUMBER IN PARENTHESIS

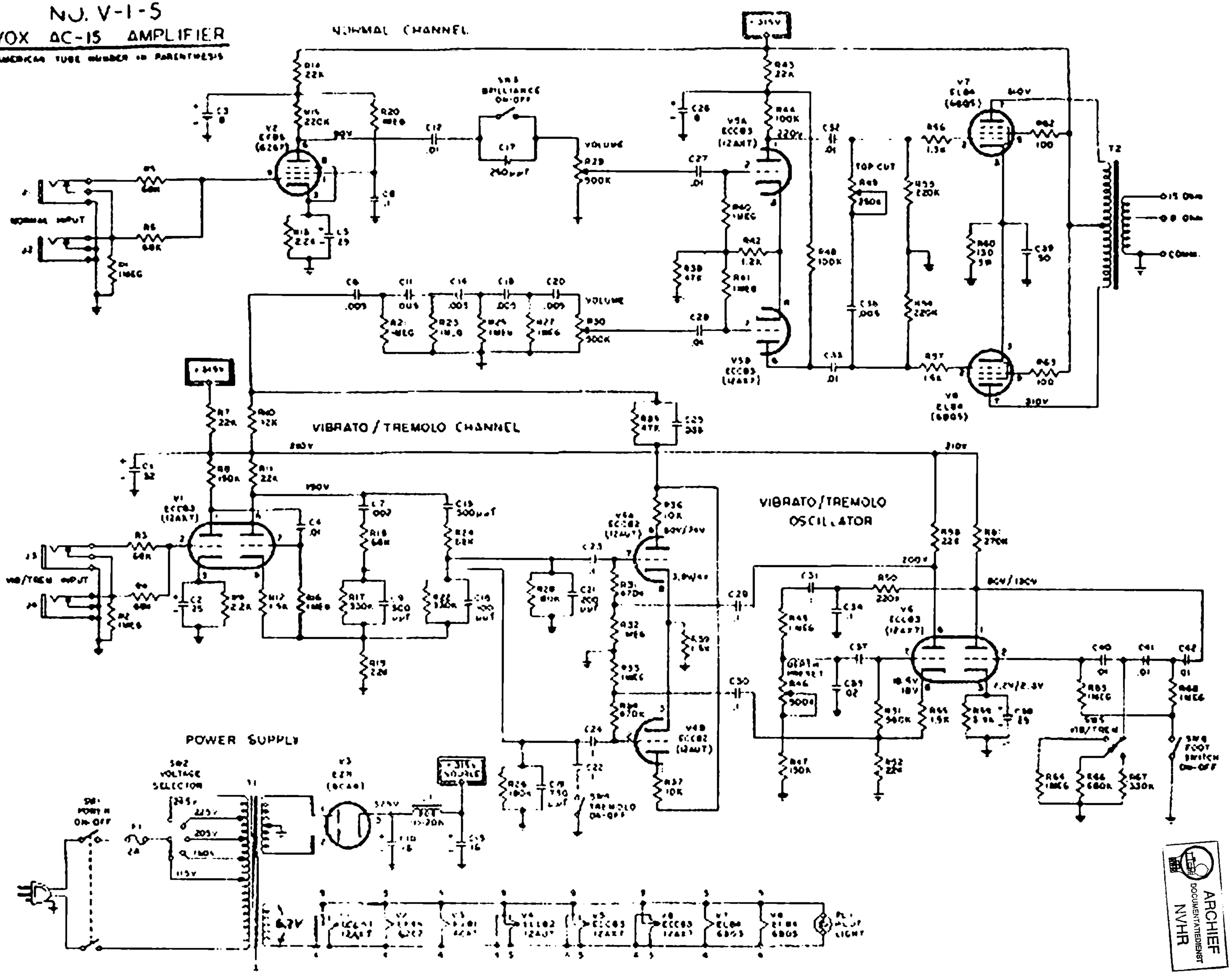

ARCHIEF DOCUMENTATIEDIENST NVHR

Ned. Ver. v. Historie v/d