DWG.No. AC15-60-02

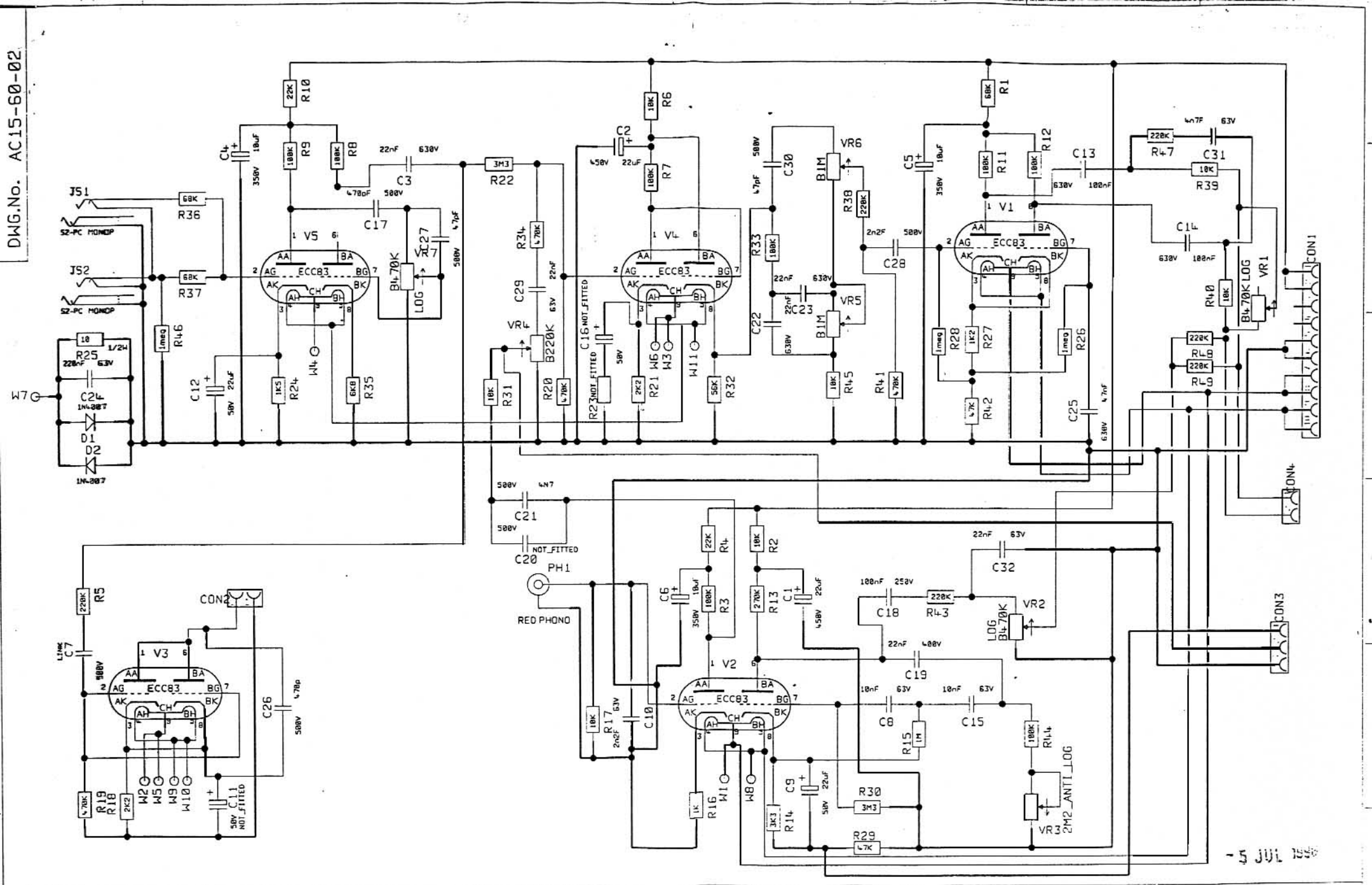

			ALL OTHER HOLES =					X = (THROUGH PLATED)									
			A			E			J			N					
			B			F			K			P					
			C			G			L			Q					
ISS	ECO NUMBER	DATE	D			H			M			R					

SG 2_3_96

AC15

VOX

TITLE
AC15 PREAMP

DWG.No
AC15-60-02

SHEET 1

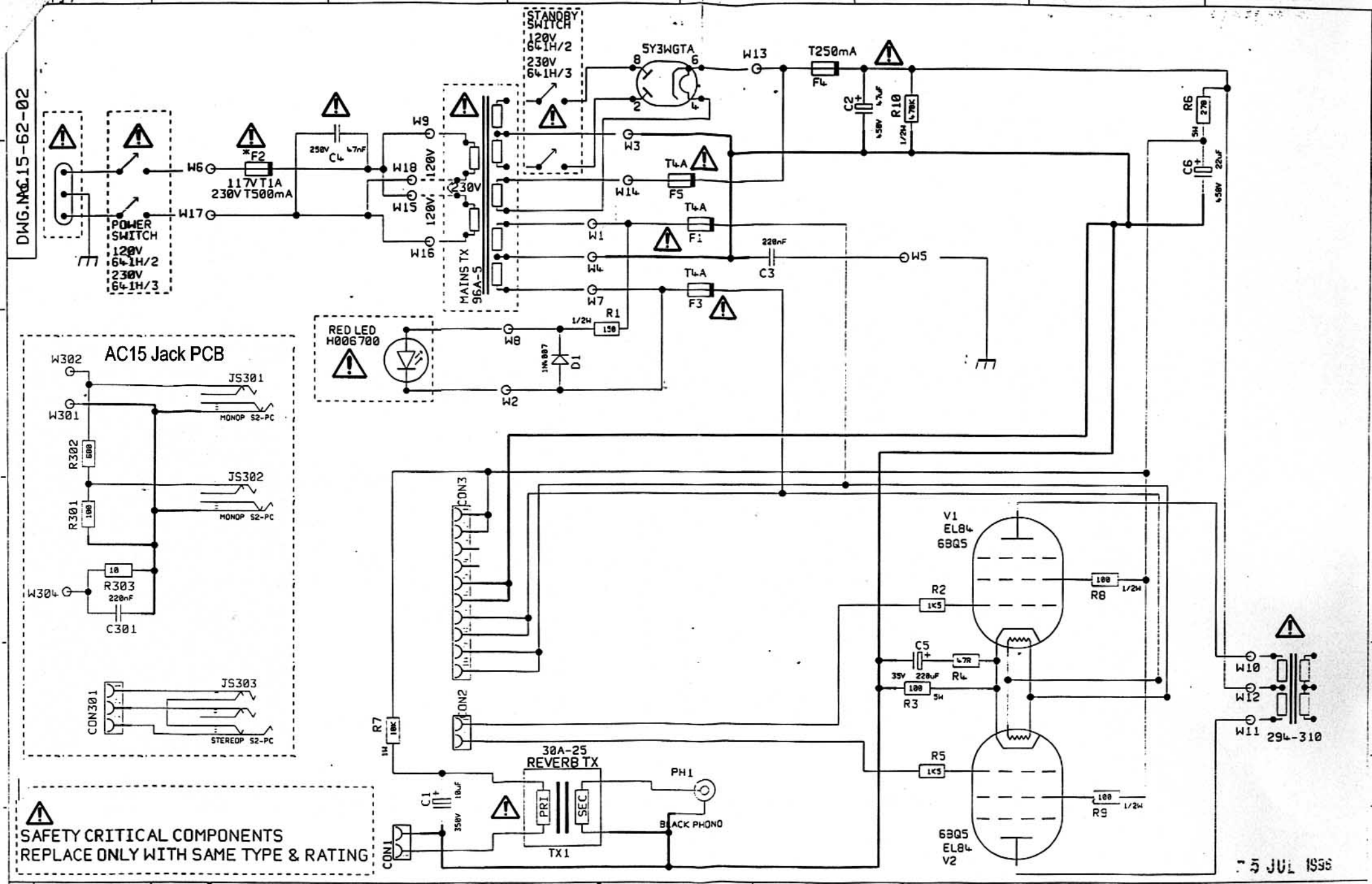
DWG.No AC15-62-02
STANDBY SWITCH
120V 641H/2
230V 641H/3
5Y3WGTA
W13
T250mA
F4
C2
R10
R6
C6
W6
W17
POWER SWITCH
120V 641H/2
230V 641H/3
*F2
117V T1A
230V T500mA
C4
W9
W18
W15
W16
120V
230V
MAINS TX 96A-5
W3
W14
W1
W4
W7
T4A
F5
F1
F3
C3
W5
RED LED H006700
W8
W2
R1
D1
AC15 Jack PCB
W302
W301
W304
JS301
JS302
JS303
MONOP S2-PC
STEREOP S2-PC
R302
R301
R303
C301
CON301
CON3
CON2
CON1
R7
C1
30A-25 REVERB TX
PRI
SEC
TX1
PH1
BLACK PHONO
V1 EL84 6BQ5
V2 6BQ5 EL84
R2
R8
C5
R4
R3
R5
R9
W10
W12
W11
294-310
SAFETY CRITICAL COMPONENTS
REPLACE ONLY WITH SAME TYPE & RATING
15 JUL 1996
ALL OTHER HOLES =
X = (THROUGH PLATED)
ISS
ECO NUMBER
DATE
SG
12_2_96
AC15
VOX
TITLE
VOX AC15 PSU
DWG.No AC15-62-02
ISS 1