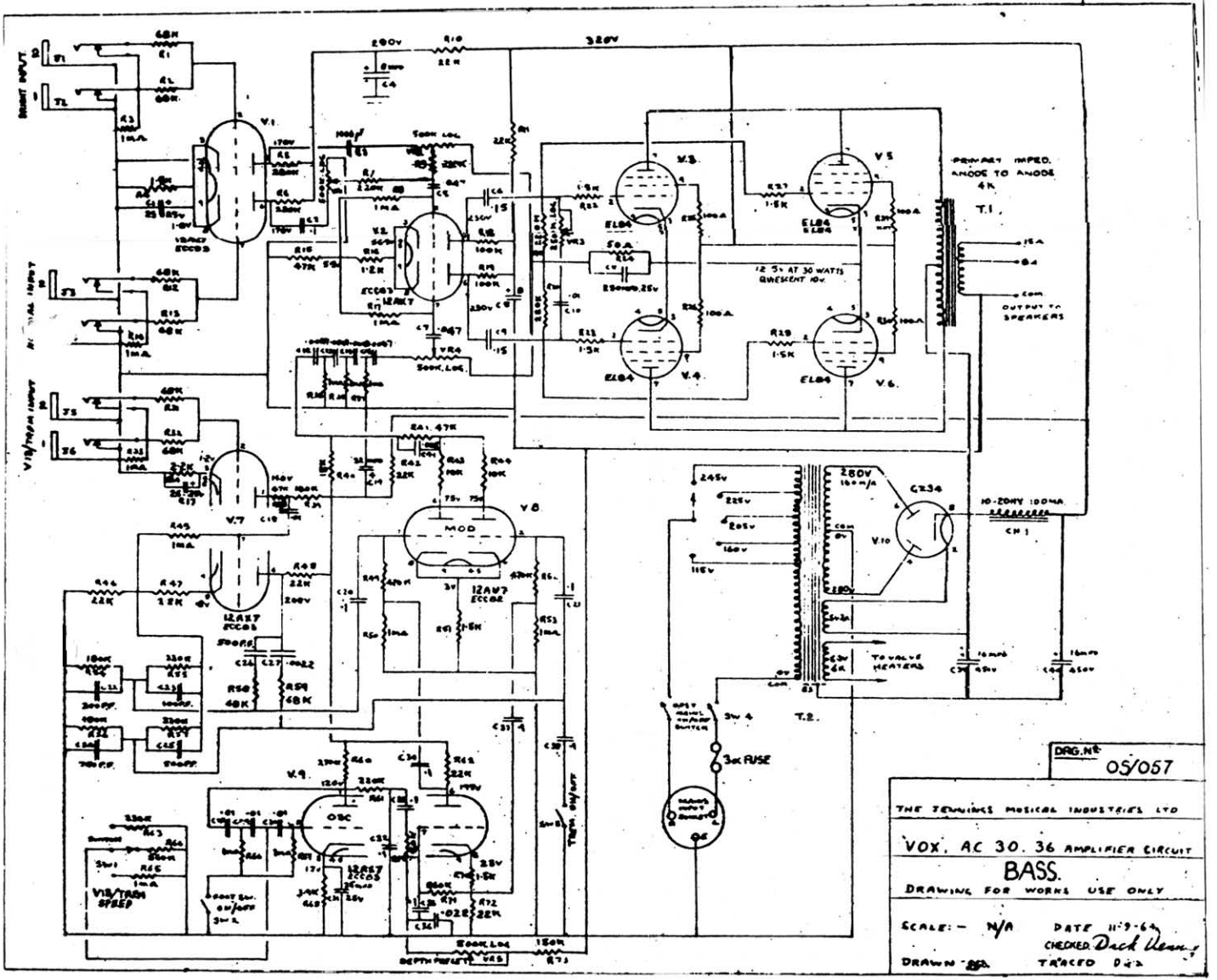

DRG.Nº 05/057

THE ZENITHS MUSICAL INDUSTRIES LTD

VOX. AC 30. 36 AMPLIFIER CIRCUIT

BASS.

DRAWING FOR WORKS USE ONLY

SCALE:- N/A DATE 11-9-64

CHECKED Dick Denny

DRAWN TRACED D.G.