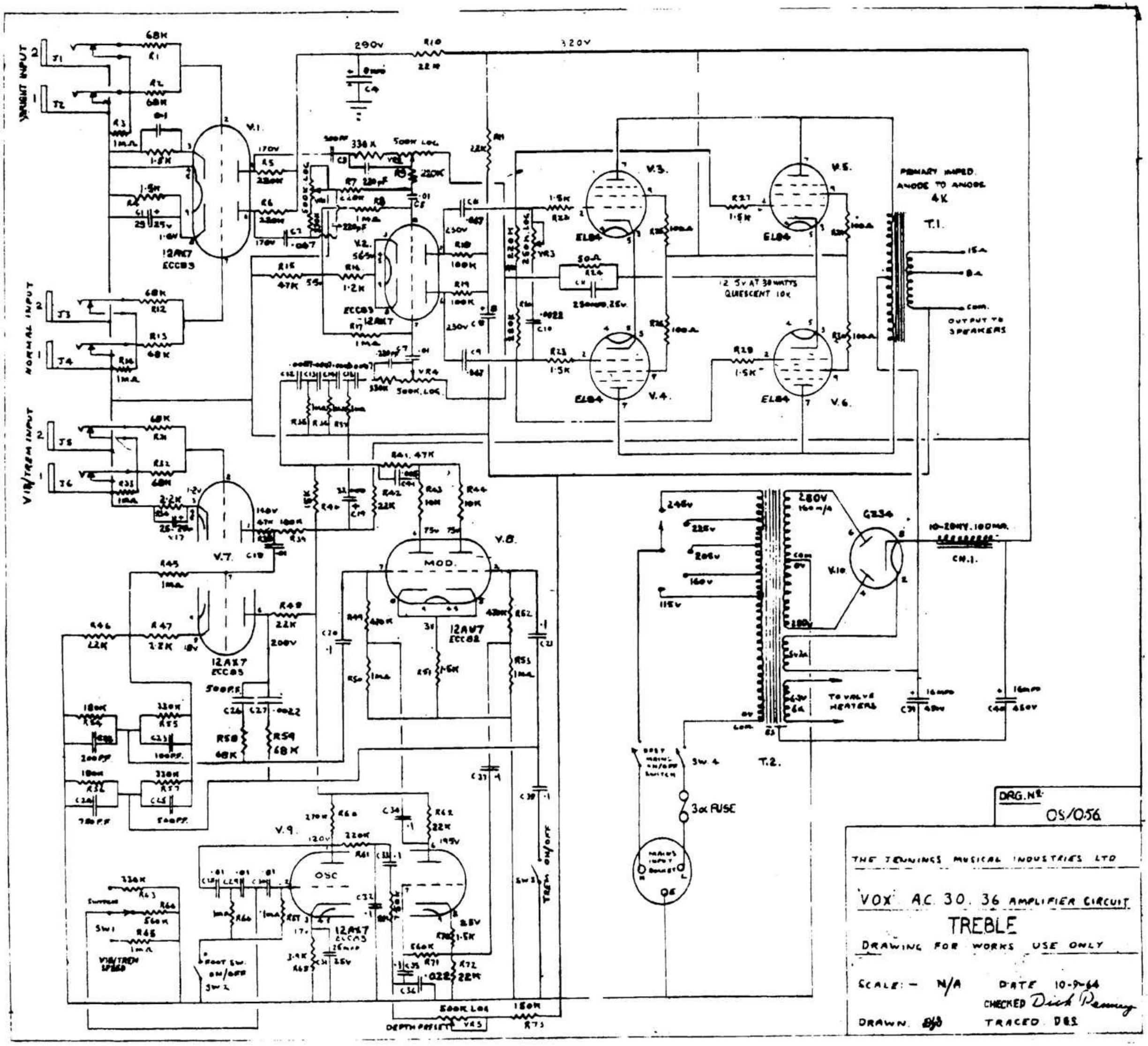
VIBRATO INPUT
NORMAL INPUT
VIB/TREM INPUT
J1
J2
J3
J4
J5
J6
V.1.
12AX7
ECC83
V.2.
ECC83
12AX7
V.3.
EL84
V.4.
EL84
V.5.
EL84
V.6.
EL84
PRIMARY IMPED.
ANODE TO ANODE
4K
T.1.
15Ω
8Ω
COM.
OUTPUT TO
SPEAKERS
12.5V AT 30 WATTS
QUIESCENT 10K
290V
320V
V.7.
12AX7
ECC83
V.8.
MOD.
12AU7
ECC82
V.9.
OSC
12AX7
ECC83
V.10.
GZ34
280V
160 m/a
10-20HY. 100MA.
CH.1.
TO VALVE
HEATERS
T.2.
3a FUSE
MAINS
INPUT
SOCKET
SW.4
SW.1
SW.2
SW.3
TREM ON/OFF
FOOT SW.
ON/OFF
VIB/TREM
SPEED
DEPTH PRESET
VR5
DRG. Nº
OS/056
THE JENNINGS MUSICAL INDUSTRIES LTD
'VOX' AC 30. 36 AMPLIFIER CIRCUIT
TREBLE
DRAWING FOR WORKS USE ONLY
SCALE:- N/A
DATE 10-9-64
CHECKED Dick Penny
DRAWN
TRACED D.E.S.