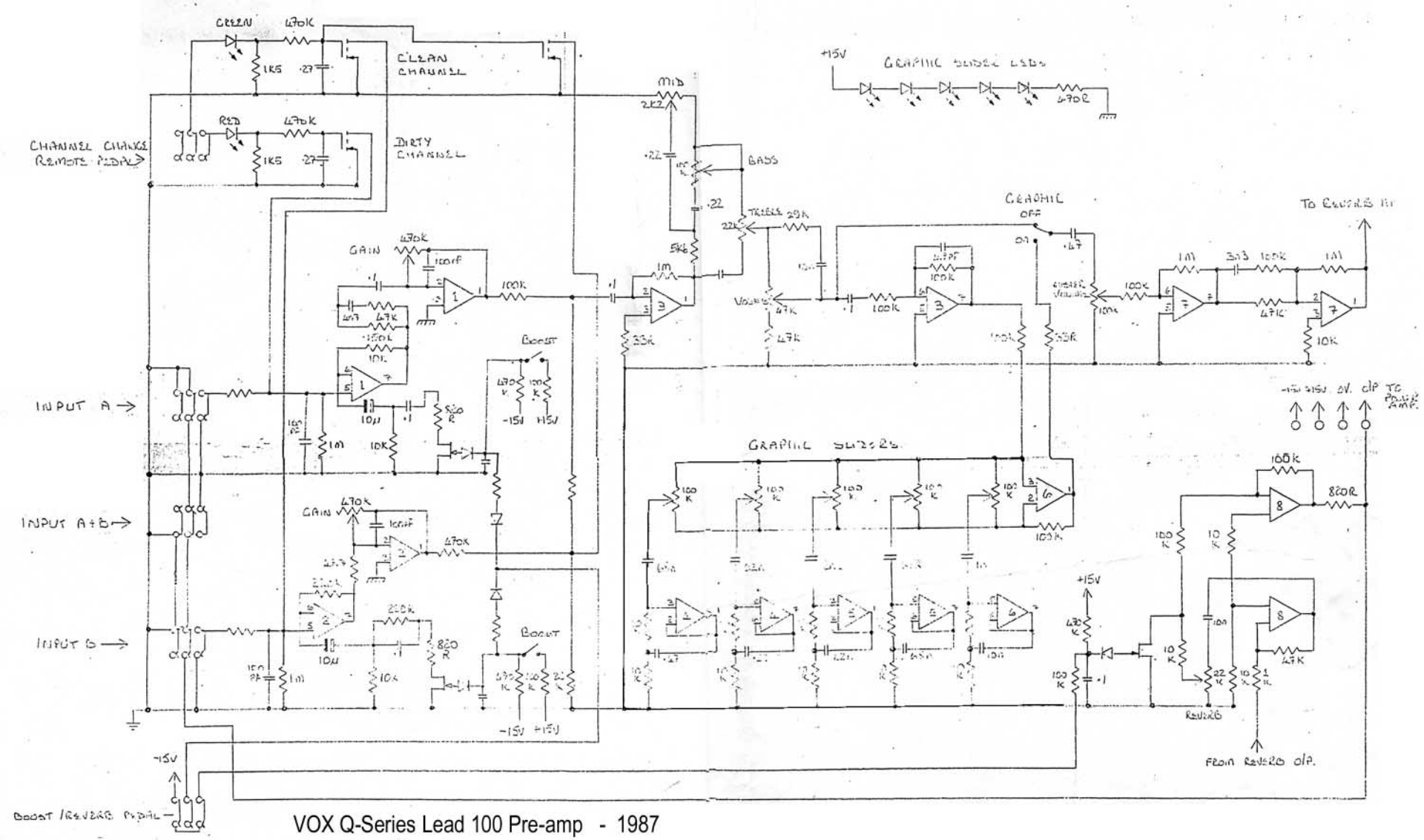

VOX Q-Series Lead 100 Pre-amp - 1987