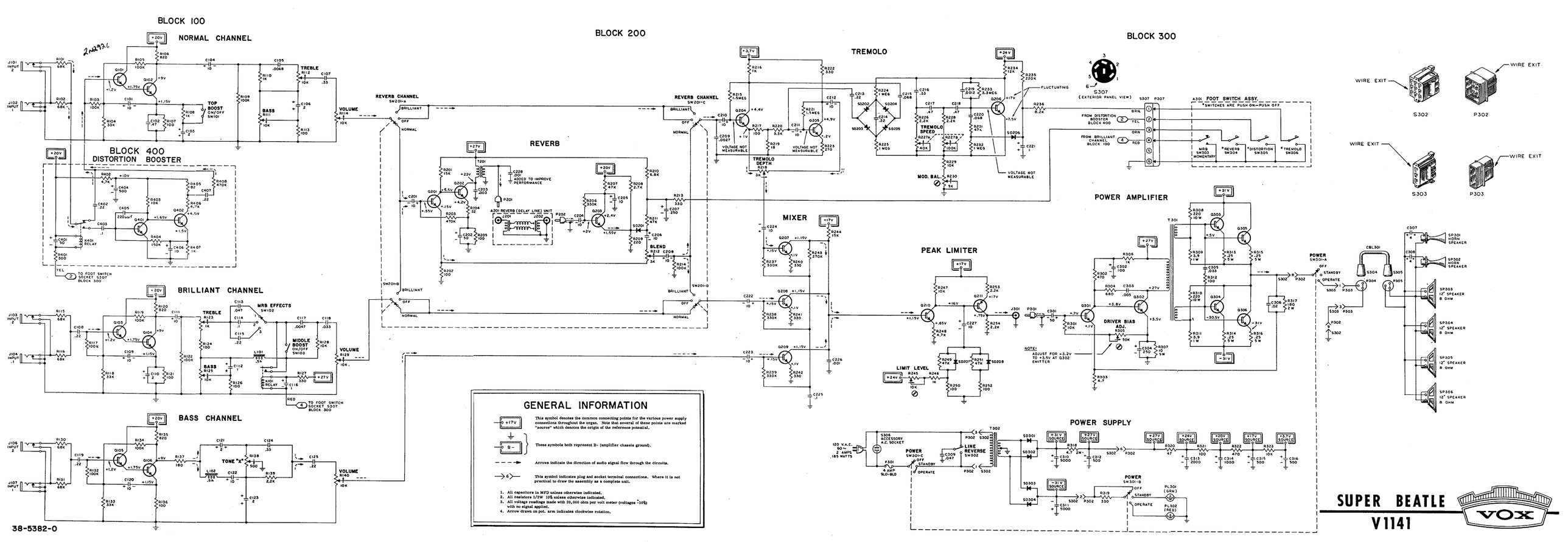
BLOCK 100
NORMAL CHANNEL
BLOCK 200
BLOCK 300
BLOCK 400
DISTORTION BOOSTER
BRILLIANT CHANNEL
BASS CHANNEL
REVERB
TREMOLO
MIXER
PEAK LIMITER
POWER AMPLIFIER
POWER SUPPLY
FOOT SWITCH ASSY.
GENERAL INFORMATION
This symbol denotes the common connecting points for the various power supply connections throughout the organ. Note that several of these points are marked "source" which denotes the origin of the reference potential.
These symbols both represent B- (amplifier chassis ground).
Arrows indicate the direction of audio signal flow through the circuits.
This symbol indicates plug and socket terminal connections. Where it is not practical to draw the assembly as a complete unit.
1. All capacitors in MFD unless otherwise indicated.
2. All resistors 1/2W 10% unless otherwise indicated.
3. All voltage readings made with 20,000 ohm per volt meter (voltages ±10%) with no signal applied.
4. Arrow drawn on pot. arm indicates clockwise rotation.
SUPER BEATLE
V1141
VOX
38-5382-0