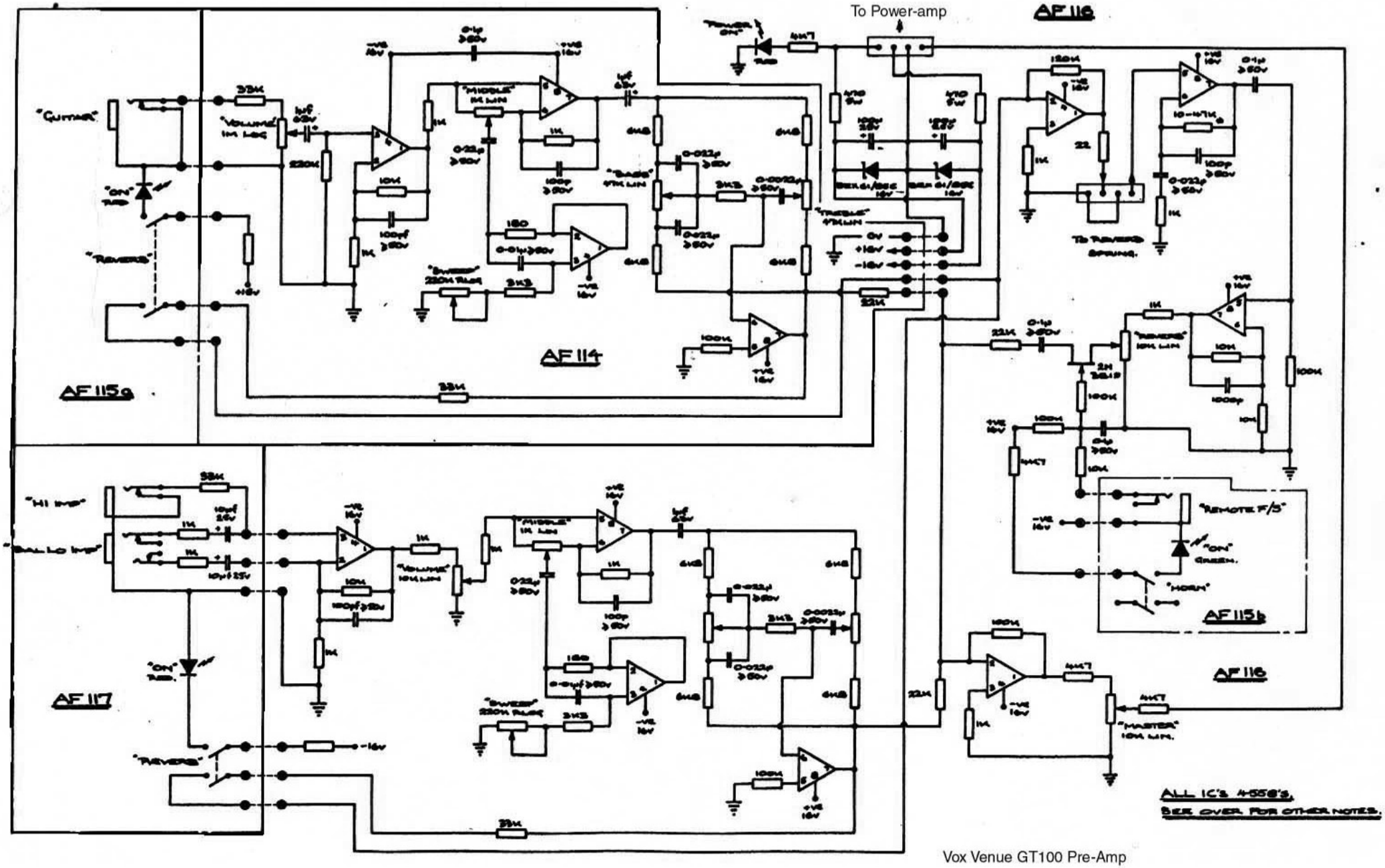

Vox Venue GT100 Pre-Amp