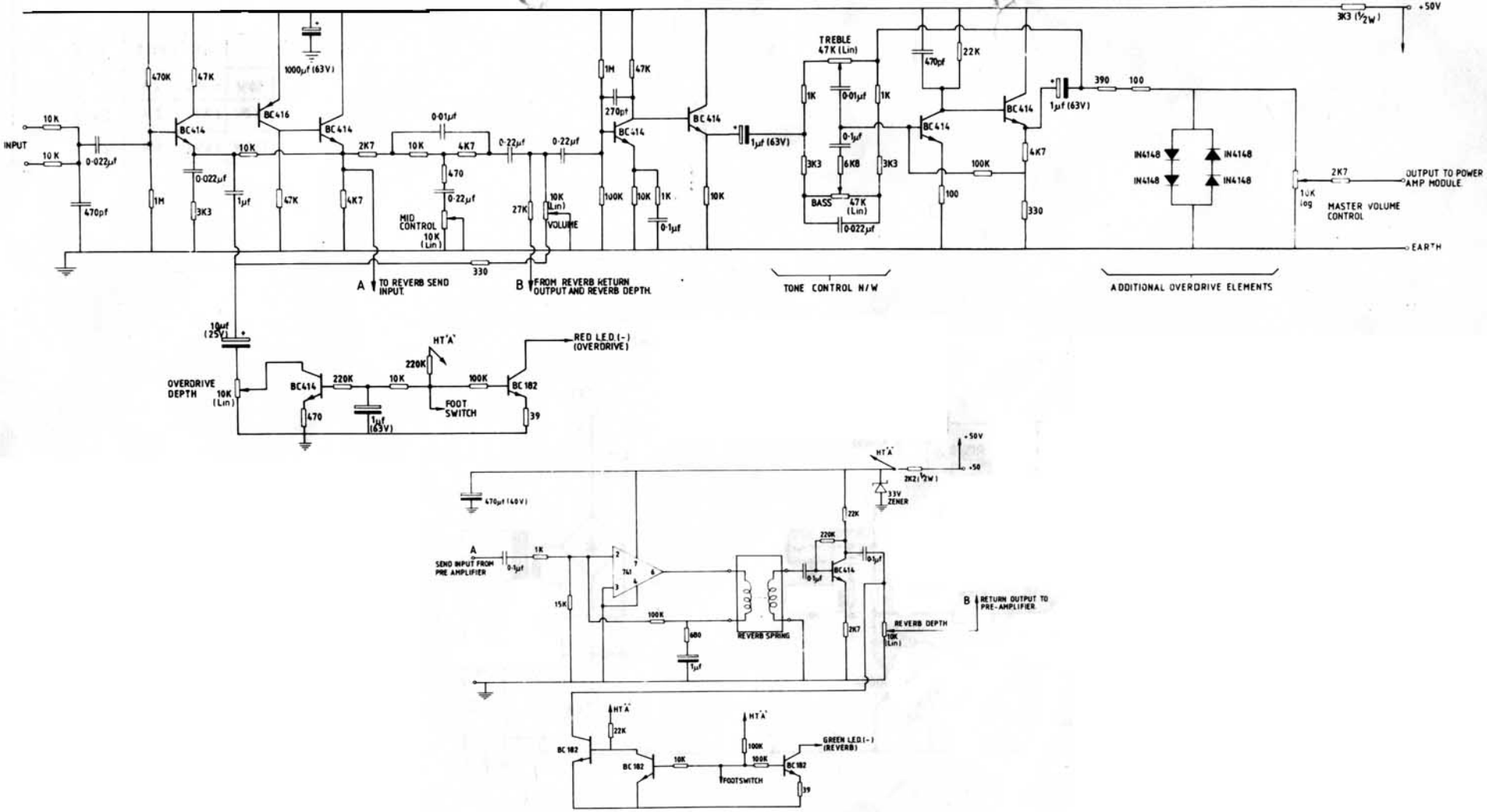

VOX LEAD PRE-AMPLIFIER Model 1200

Pre-amp for Vox Venue Lead100