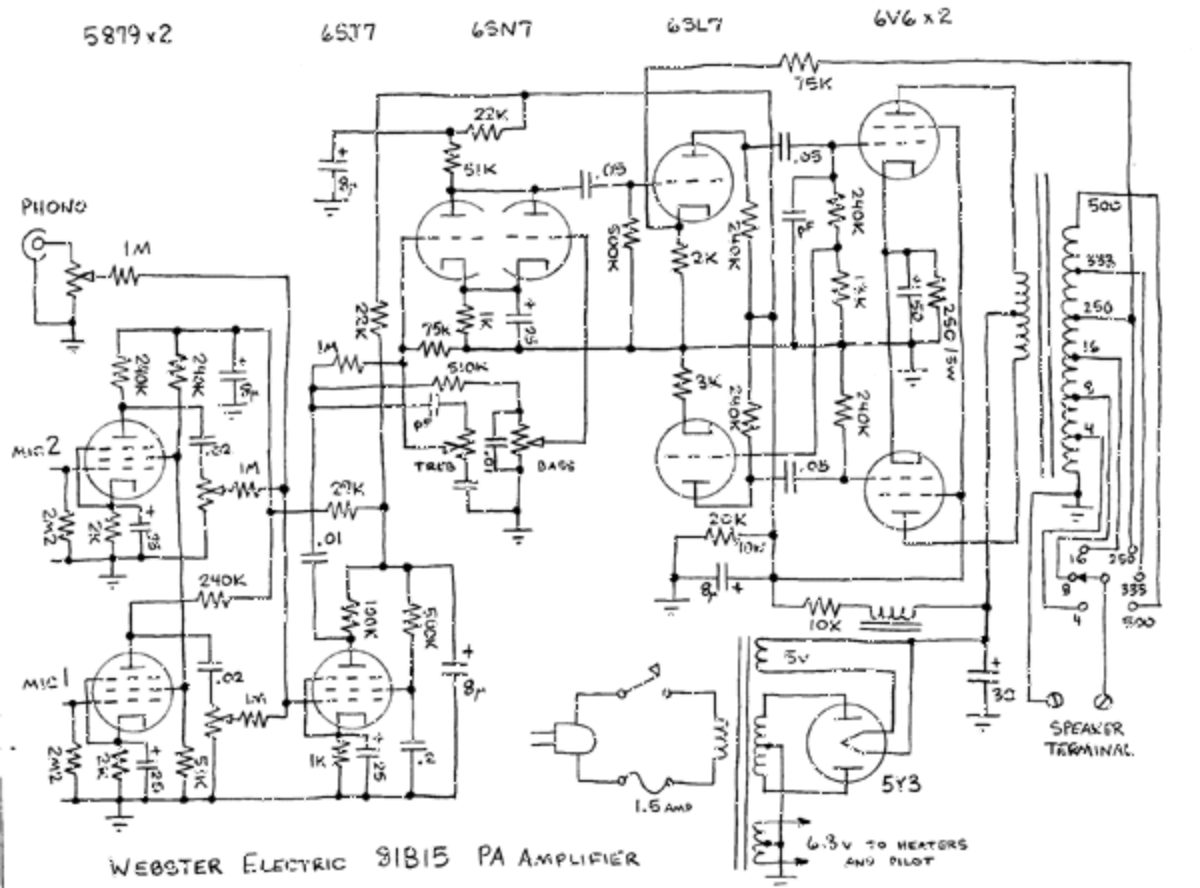
5879 x2
6SJ7
6SN7
6SL7
6V6 x2
PHONO
1M
MIC 2
MIC 1
22K
51K
75K
510K
TREB
BASS
240K
20K
10K
500K
2K
3K
1.05
.01
.02
.12
8μ
30
5V
5Y3
1.5 AMP
6.3V TO HEATERS AND PILOT
SPEAKER TERMINAL
500
333
250
16
8
4
WEBSTER ELECTRIC 91B15 PA AMPLIFIER