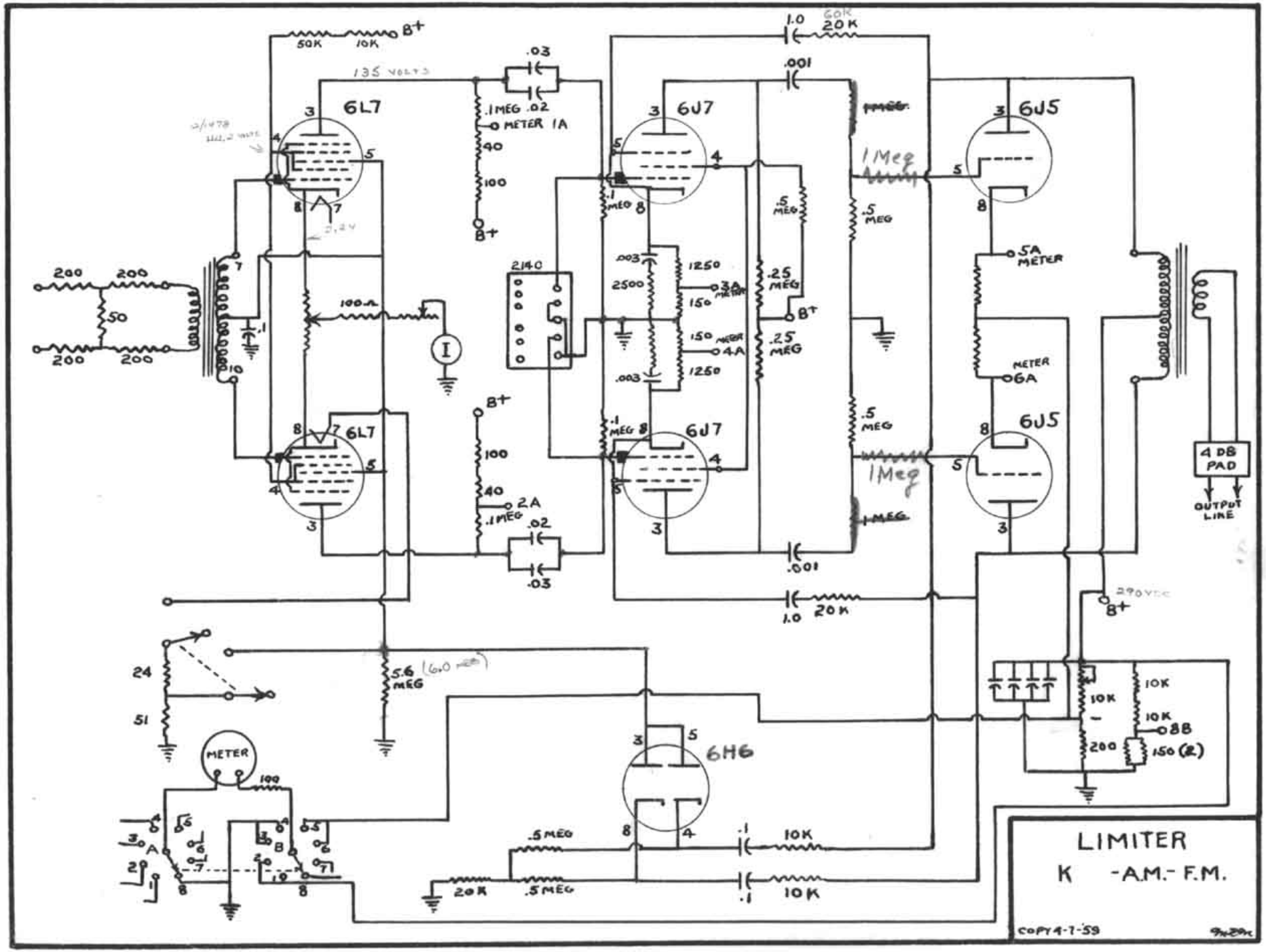

LIMITER
K -A.M.- F.M.
COPY 4-7-59
6L7
6J7
6J5
6H6
135 VOLTS
50K
10K
B+
.03
.02
.1MEG
METER 1A
40
100
2140
.003
2500
1250
150
3A METER
150 METER
4A
.1 MEG
.5 MEG
.25 MEG
1.0
60K
20K
.001
1Meg
5A METER
METER
6A
4 DB PAD
OUTPUT LINE
290VDC
200
50
100Ω
2A
5.6 MEG
24
51
METER
10K
8B
150 (2)
20K