STEREO INTEGRATED AMPLIFIER

AX-350

SERVICE MANUAL

■ FRONT PANEL

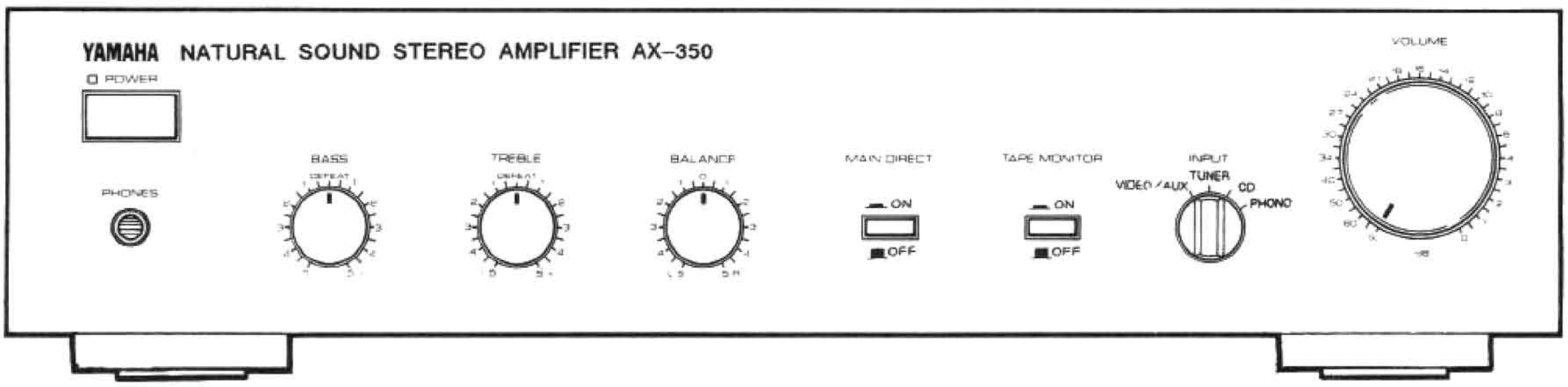

IMPORTANT NOTICE

This manual has been provided for the use of authorized Yamaha Retailers and their service personnel. It has been assumed that basic service procedures inherant to the industry, and more specifically Yamaha Products, are already known and understood by the users, and have therefore not been restated.

WARNING: Failure to follow appropriate service and safety procedures when servicing this product may result in personal injury, destruction of expensive components and failure of the product to perform as specified. For these reasons, we advise all Yamaha product owners that all service required should be performed by an authorized Yamaha Retailer or the appointed service representative.

IMPORTANT: The presentation or sale of this manual to any individual or firm does not constitute authorization, certification, recognition of any applicable technical capabilities, or establish a principle-agent relationship of any form.

The data provided is believed to be accurate and applicable to the unit(s) indicated on the cover. The research, engineering, and service departments of Yamaha are continually striving to improve Yamaha products. Modifications are, therefore, inevitable and specifications are subject to change without notice or obligation to retrofit. Should any discrepancy appear to exist, please contact the distributor's Service Division.

WARNING: Static discharges can destroy expensive components. Discharge any static electricity your body may have accumulated by grounding yourself to the ground buss in the unit (heavy gauge black wires connect to this buss).

IMPORTANT: Turn the unit OFF during disassembly and parts replacement. Recheck all work before you apply power to the unit.

■ CONTENTS

TO SERVICE PERSONNEL ····· 1
REAR PANELS ····· 1
SPECIFICATIONS ····· 2
INTERNAL VIEW ····· 3
DISASSEMBLY PROCEDURES ····· 3
ADJUSTMENTS ····· 4
BLOCK DIAGRAM ····· 4
WIRING ····· 5
IC BLOCK ····· 5
PRINTED CIRCUIT BOARD ····· 6~11
SCHEMATIC DIAGRAM ····· 12,13
PARTS LIST ····· 14~19

100360

YAMAHA
YAMAHA CORPORATION
P.O.Box 1, Hamamatsu, Japan
0.24k-502 ⊜ Printed in Japan '90.10

■ TO SERVICE PERSONNEL

1. Critical Components Information.
   Components having special characteristics are marked ⚠ and must be replaced with parts having specifications equal to those originally installed.

2. Leakage Current Measurement (For 120V Model Only).
   When service has been completed, it is imperative that you verify that all exposed conductive surfaces are properly insulated from supply circuits.

- Meter impedance should be equivalent to 1500 ohm shunted by 0.15μF.
- Leakage current must not exceed 0.5mA.
- Be sure to test for leakage with the AC plug in both polarities.

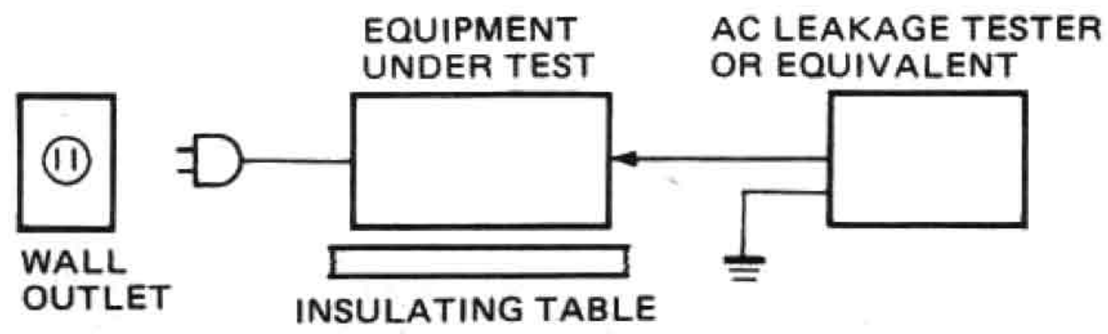

WARNING: CHEMICAL CONTENT NOTICE!

The solder used in the production of this product contains LEAD. In addition, other electrical/electronic and/or plastic (where applicable) components may also contain traces of chemicals found by the California Health and Welfare Agency (and possibly other entities) to cause cancer and/or birth defects or other reproductive harm.

DO NOT PLACE SOLDER, ELECTRICAL/ELECTRONIC OR PLASTIC COMPONENTS IN YOUR MOUTH FOR ANY REASON WHAT SO EVER!

Avoid prolonged, unprotected contact between solder and your skin! When soldering, do not inhale solder fumes or expose eyes to solder/flux vapor!

If you come in contact with solder or components located inside the enclosure of this product, wash your hands before handling food.

■ REAR PANELS

● Canadian model

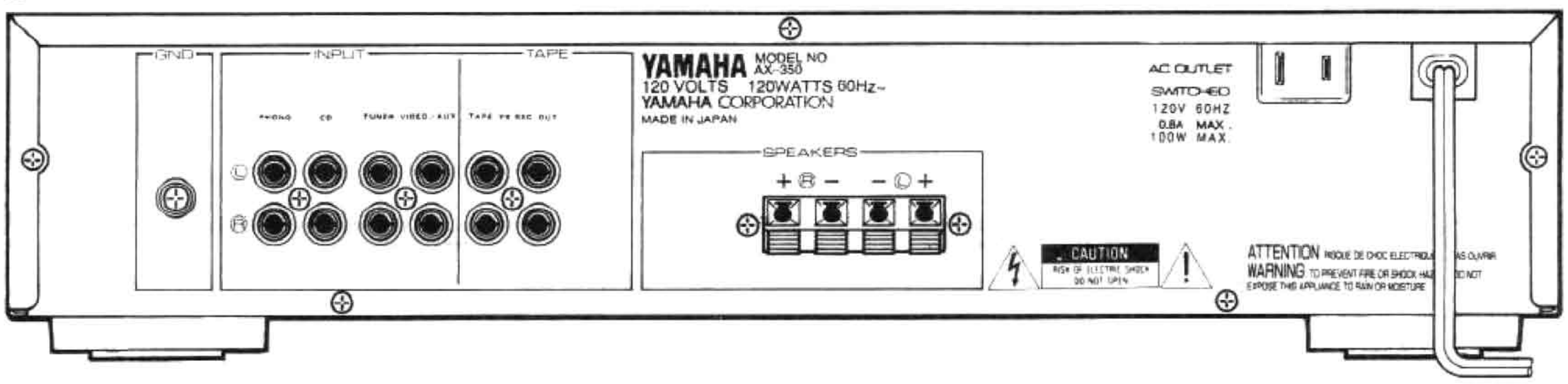

● European model

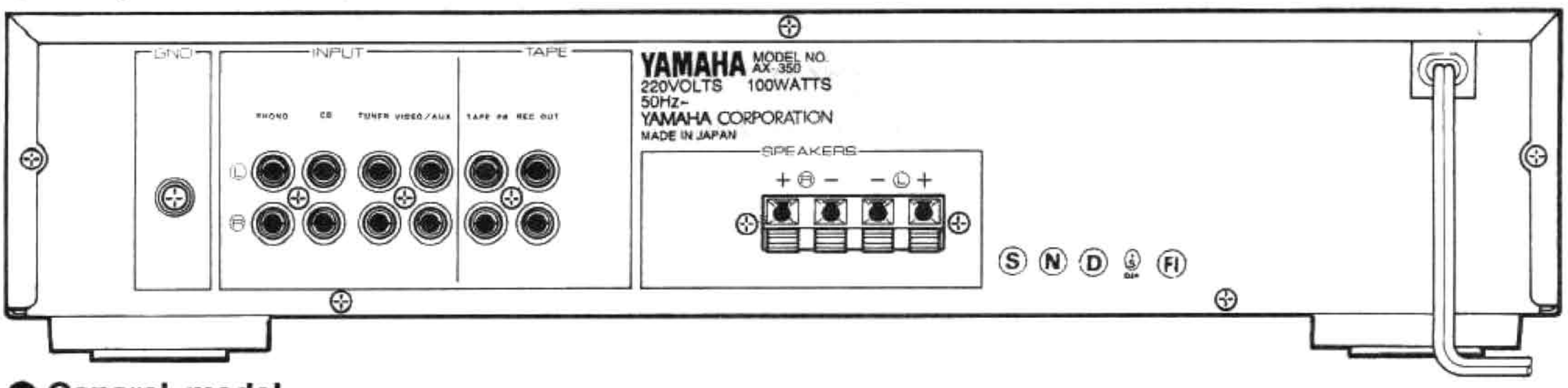

● General model

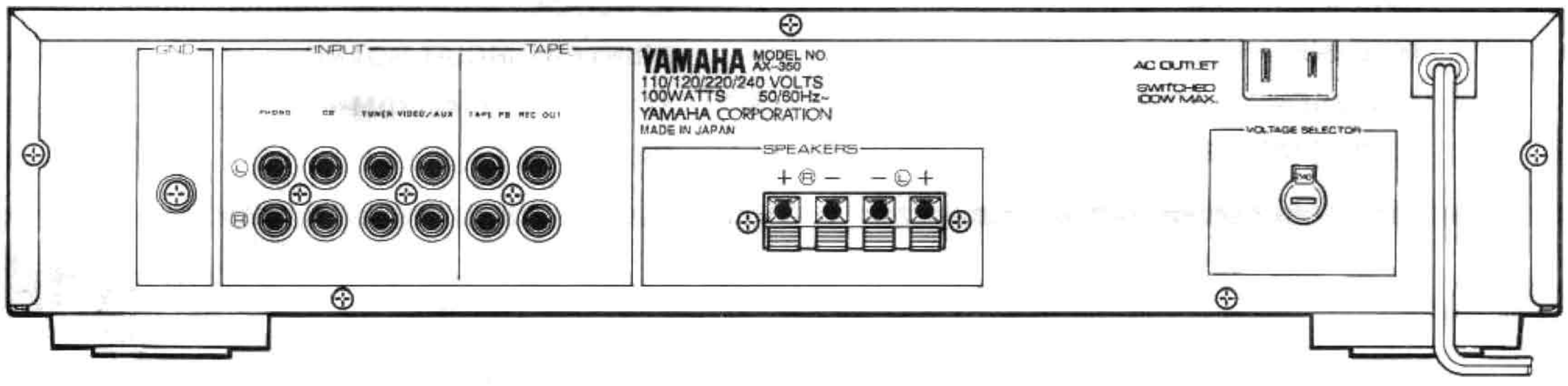

● Australian & British models

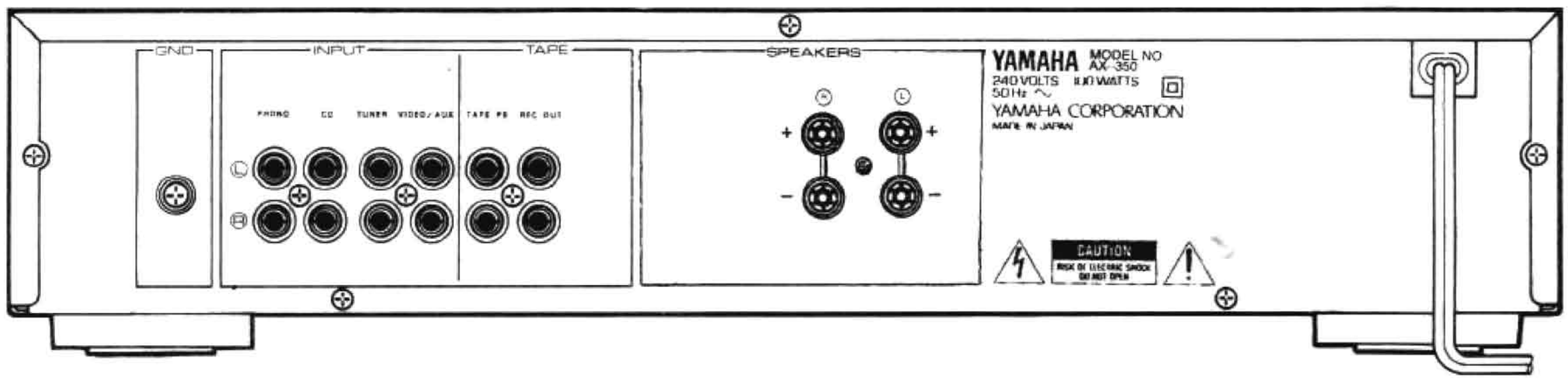

■ SPECIFICATIONS

Minimum RMS Output Power Per Channel
20 Hz – 20 kHz 0.05% THD 8Ω 30W

Dynamic Power Per Channel
(by IHF Dynamic Headroom Measuring Method)
1 kHz 8Ω/4Ω/2Ω 55W/75W/80W

DIN Standard Output Power Per Channel
(European model)
1 kHz 0.7% THD 4Ω 40W

IEC Power (European model)
1 kHz 0.01% THD 8Ω 35W

Power Bandwidth
0.05% THD 15W 8Ω ..... 10 Hz – 50 kHz

Damping Factor
1 kHz 8Ω 40

Input Sensitivity/Impedance
PHONO ..... 2.5 mV/47 kΩ
CD/TUNER/VIDEO·AUX/TAPE ..... 150 mV/50 kΩ

Input Sensitivity (New IHF)
(Canadian and General models)
PHONO ..... 0.47 mV
CD/TUNER/VIDEO·AUX/TAPE ..... 28 mV

Maximum Input Signal (1 kHz 0.02% THD)
PHONO ..... 150 mV

Output Level/Impedance
REC OUT 150 mV/560Ω

Headphone Jack Rated Output/Impedance
Output Level ..... 0.05% THD RL=8Ω, 0.5V
Impedance 220Ω

Frequency Response
CD/TUNER/VIDEO·AUX/TAPE
..... 20 Hz – 20 kHz, $0^{+0}_{-0.5}$ dB

RIAA Equalization Deviation
PHONO ..... 0±0.5 dB

Total Harmonic Distortion 20 Hz – 20 kHz
PHONO to REC OUT, 3V 0.01%
CD/TUNER/VIDEO·AUX/TAPE to
SP Out, 15W/8 Ω 0.02%

Intermodulation Distortion
CD/TUNER/VIDEO·AUX/TAPE
Rated Output/8Ω 0.05%

Signal-to-Noise Ratio (IHF-A Network)
PHONO (5 mV Input Shorted) ..... 88 dB
(Europe model: 84 dB)
CD/TUNER/VIDEO·AUX/TAPE (Shorted)
..... 100 dB

Signal-to-Noise Ratio (New IHF)
(General, Canadian, Australian and British models)
PHONO ..... 74 dB
CD/TUNER/VIDEO·AUX/TAPE ..... 85 dB

Residual Noise (IHF-A Network) ..... 160 μV

Channel Separation Vol –30 dB
PHONO, Input shorted
1 kHz/10 kHz ..... 60 dB/40 dB
CD/TUNER/VIDEO·AUX/TAPE
Input 5.1 kΩ
Terminated 1 kHz/10 kHz ..... 60 dB/40 dB

Tone Control Characteristics
Bass
Boost / Cut ..... ±10 dB (20 Hz)
Turnover frequency ..... 350 Hz
Treble
Boost / Cut ..... ±10 dB (20 kHz)
Turnover frequency ..... 3.5 kHz

Gain Tracking Error
(0 – –60 dB) ..... 3 dB

Power Supply
Canadian model ..... AC 120V/60 Hz
European model ..... AC 220V/50 Hz
Australian and British models ..... AC 240V/50 Hz
General model ..... AC 110/120/220/240V 60/50 Hz

Power Consumption
Canadian model 120W
Australian, European and British models 100W
General model 100W

AC Outlet (Canadian and General models)
1 SWITCHED OUTLET ..... 100W max. total

Dimensions (W x H x D)
General, Canadian and European models
..... 435 x 102 x 254 mm
(17-1/8" x 4" x 10")
Australian and British models ..... 435 x 102 x 262 mm
(17-1/8" x 4" x 10-5/16")

Weight ..... 4.4 kg
(9 lbs. 11 oz.)

* Specifications are subject to change without notice.

* This product complies with the radio frequency interference requirements of the Council Directive 82/499/EEC and/or 87/308/EEC.

● Dimentions

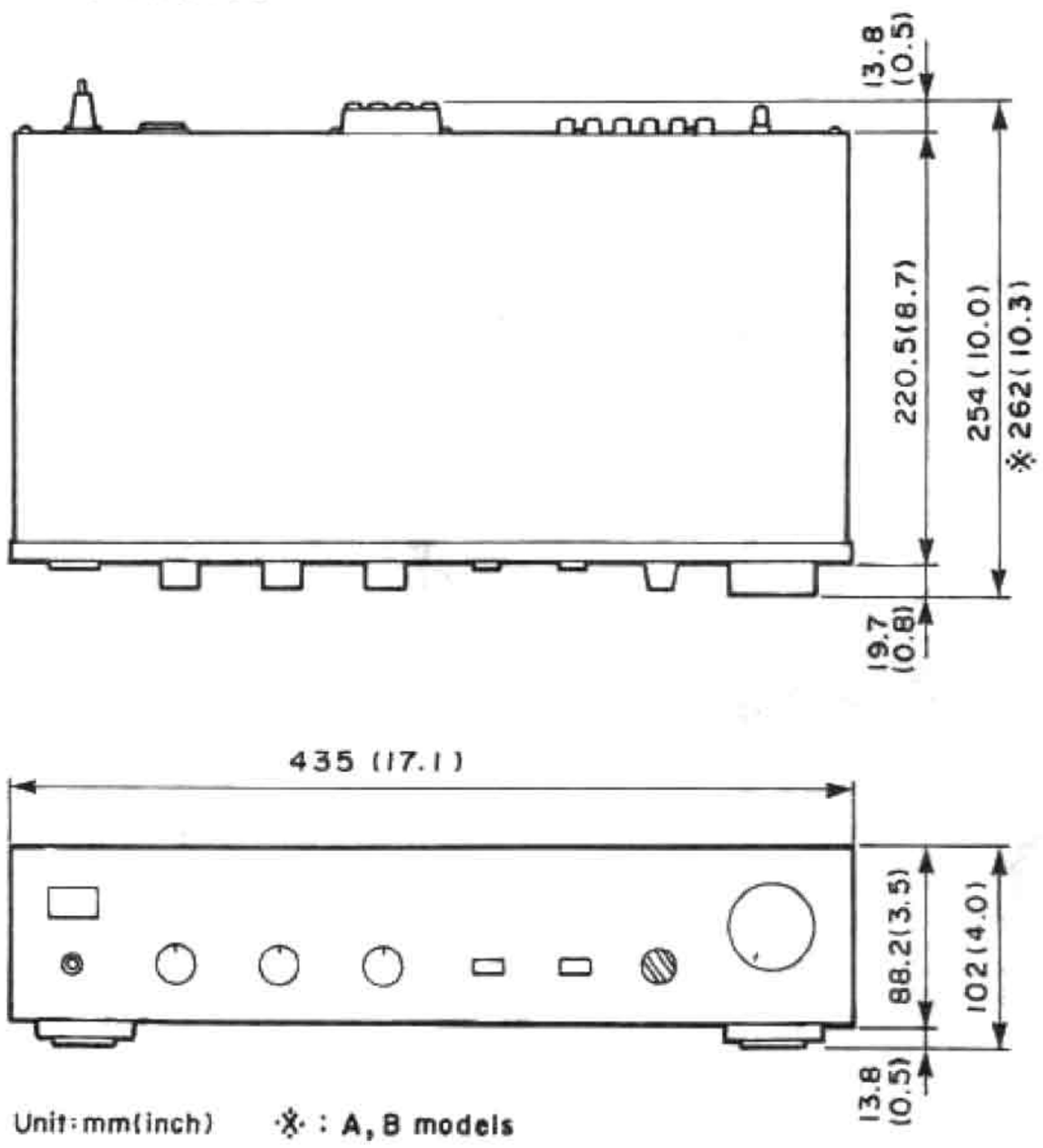

(C) ····· Canadian model
(G) ····· European model
(A) ····· Australian model
(B) ····· British model
(R) ····· General model

■ INTERNAL VIEW

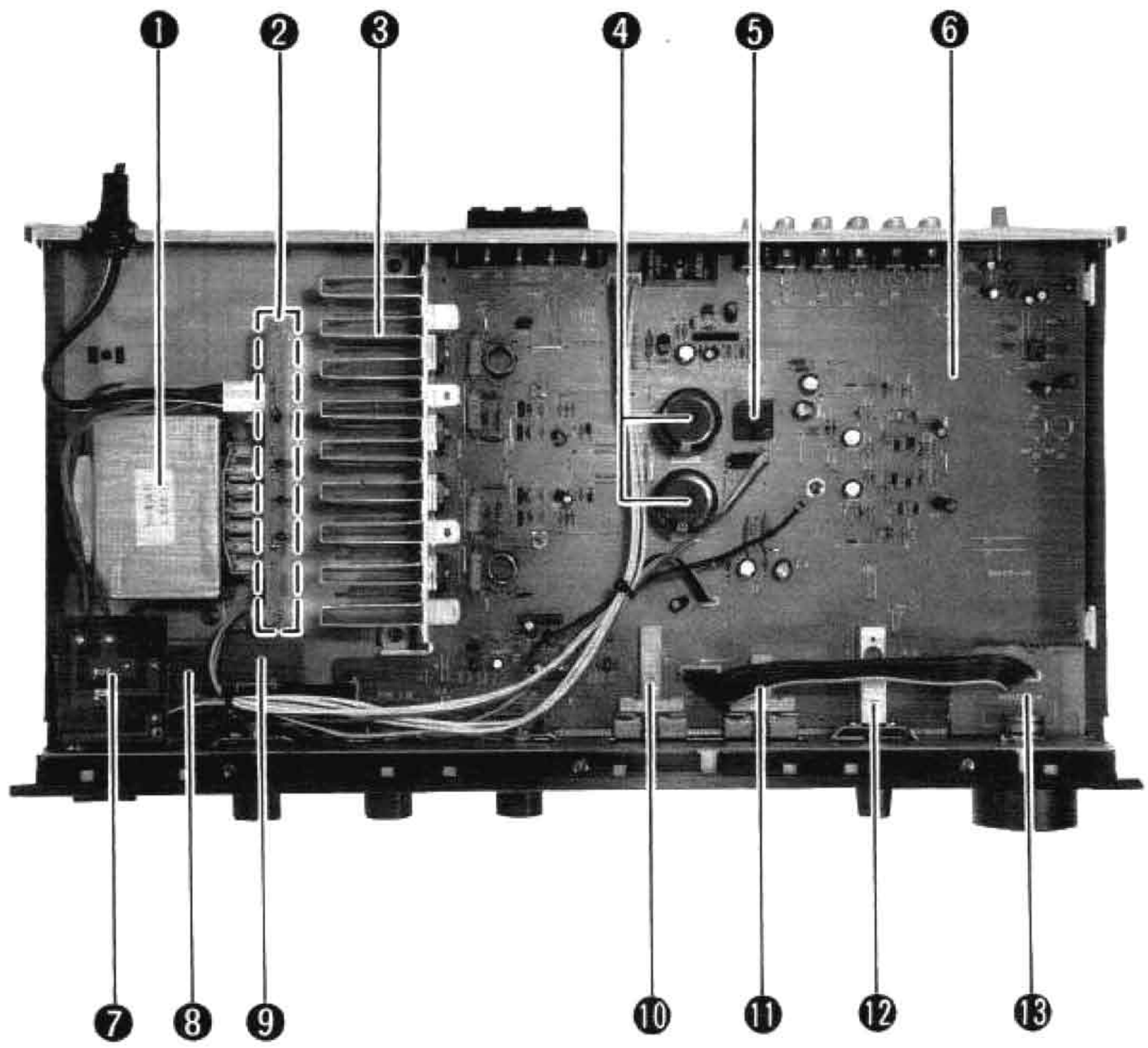

❶ POWER TRANSFORMER
❷ MAIN CIRCUIT BOARD(5)
❸ RADIATOR
❹ 6800 μF ELECTROLYTIC CAPACITOR
❺ DIODE BRIDGE
❻ MAIN CIRCUIT BOARD(1)
❼ MAIN CIRCUIT BOARD(6)
❽ MAIN CIRCUIT BOARD(4)
❾ MAIN CIRCUIT BOARD(3)
❿ MAIN DIRECT SWITCH
⓫ TAPE MONITOR SWITCH
⓬ INPUT SELECTOR SWITCH
⓭ MAIN CIRCUIT BOARD(2)

■ DISASSEMBLY PROCEDURES

(Remove parts in disassembly order as numbered)

1. Removal of Top Cover

a. Remove 2 screws (①) in Fig. 1.
b. Remove 3 screws (②) in Fig. 1, and slide the Top Cover back.

2. Removal of Front Panel

Remove 5 screws (③) in Fig. 1, and pull the Front Panel forward.

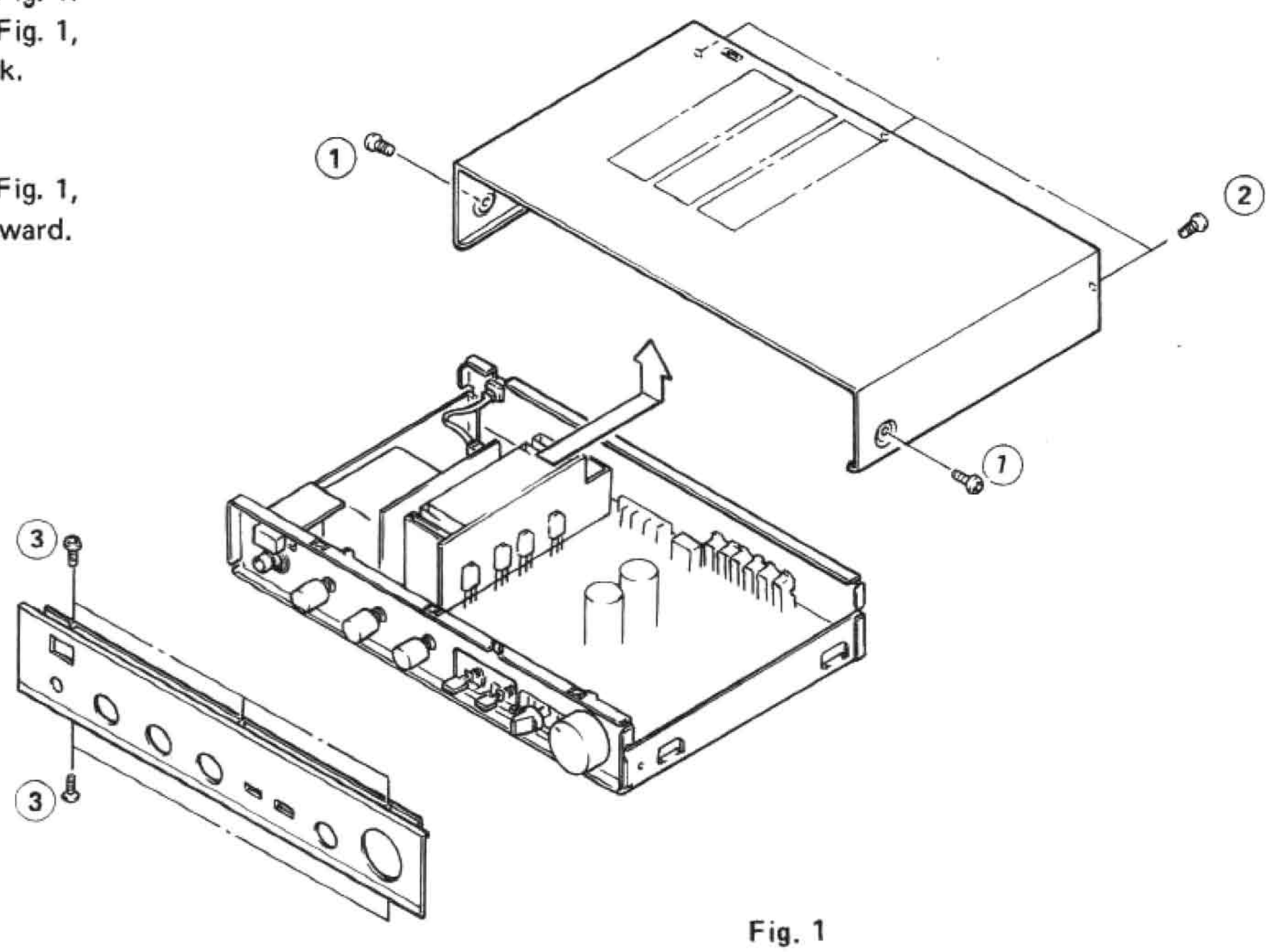

Fig. 1

■ ADJUSTMENTS

● IDLING CURRENT ADJUSTMENT

When replacing the power and drive transistors, adjust idling current. After the power has been turned on, age about 5 minutes in non loaded condition.

	Test Points	Adjustment points	Rating
Lch	R136	VR105	10mV±3mV DC.
Rch	R236	VR205	10mV±3mV DC.

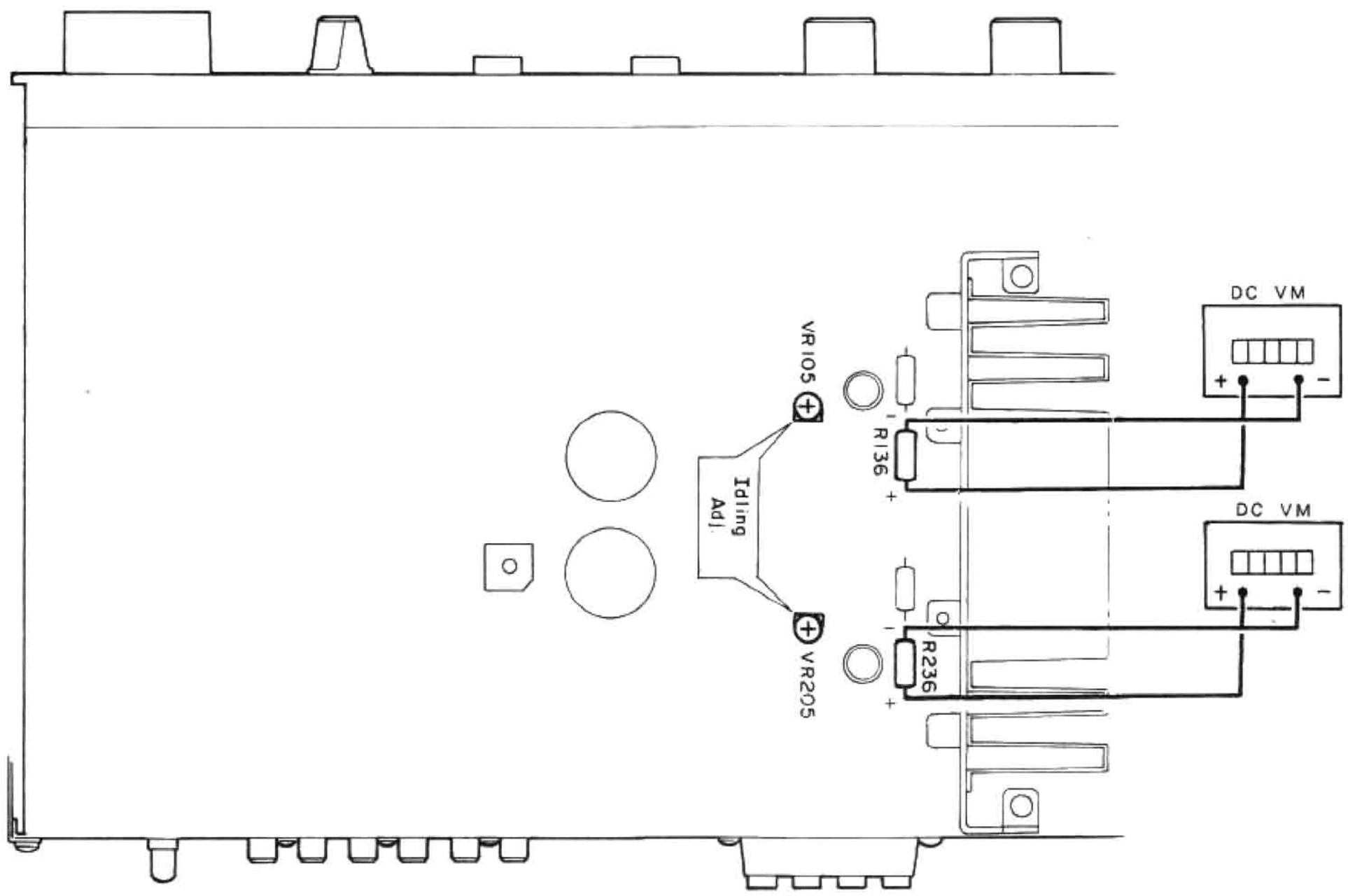

■ BLOCK DIAGRAM

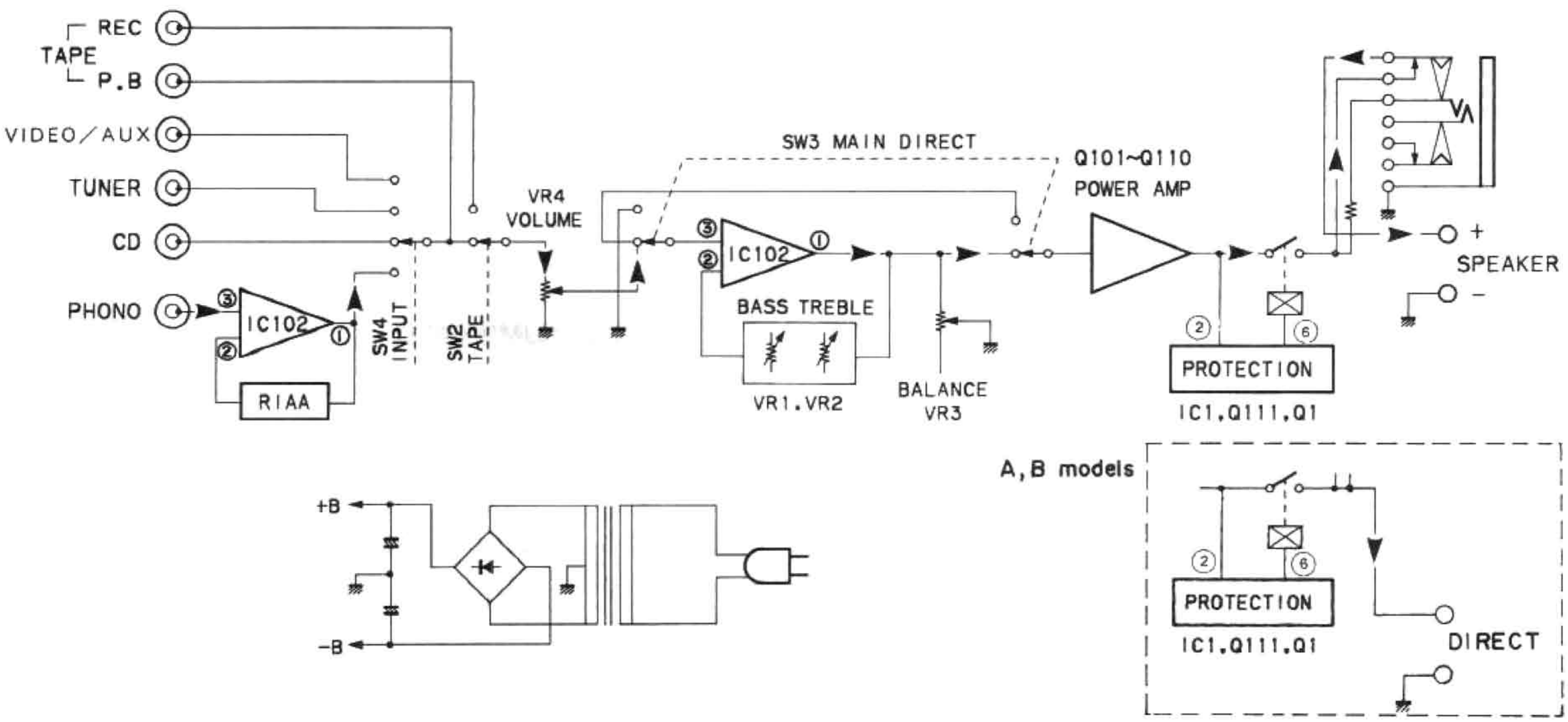

■ WIRING

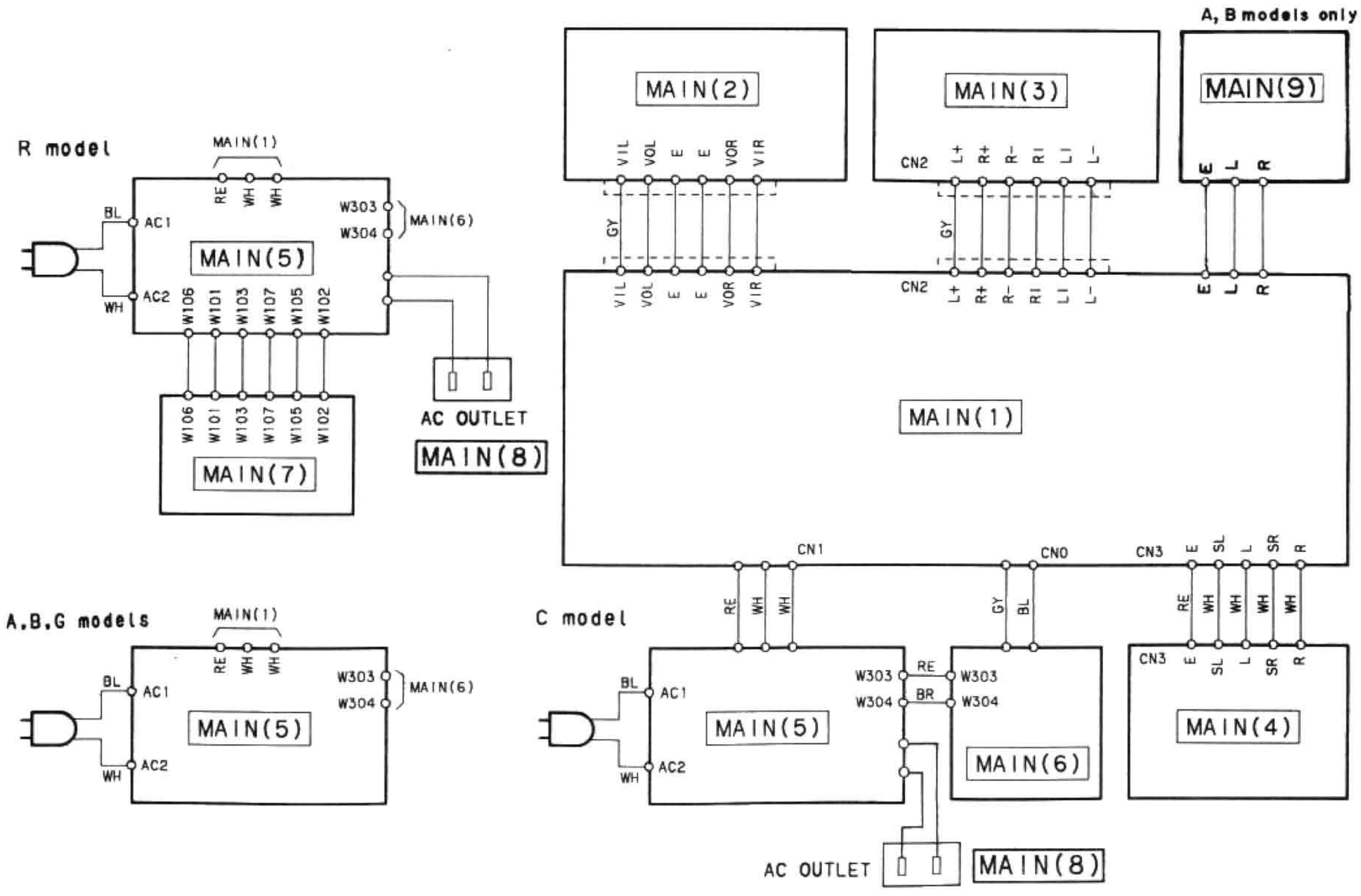

■ IC BLOCK

IC1 : μ PC1237HA

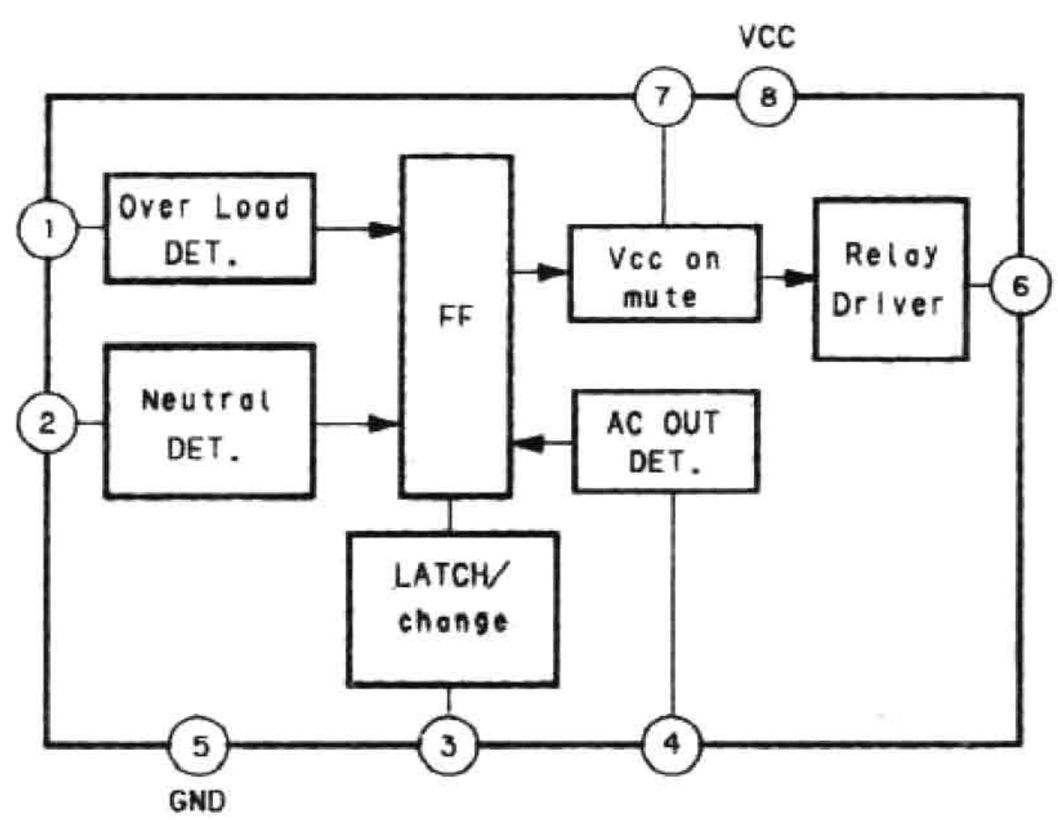

IC101 : NJM2068D–D (C,R,G models)
: NJM5532D–D (A,B models)

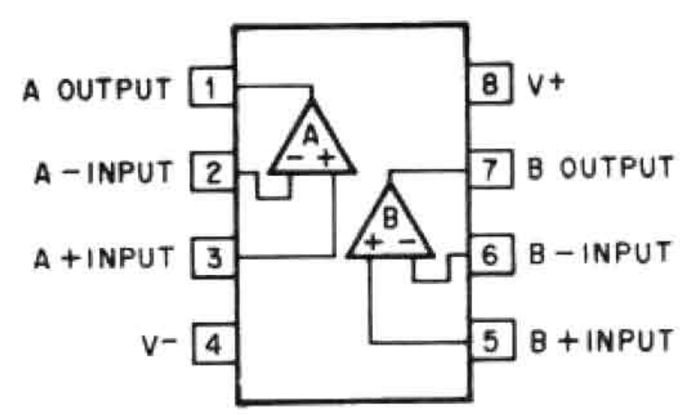

IC102 : NJM2068LD

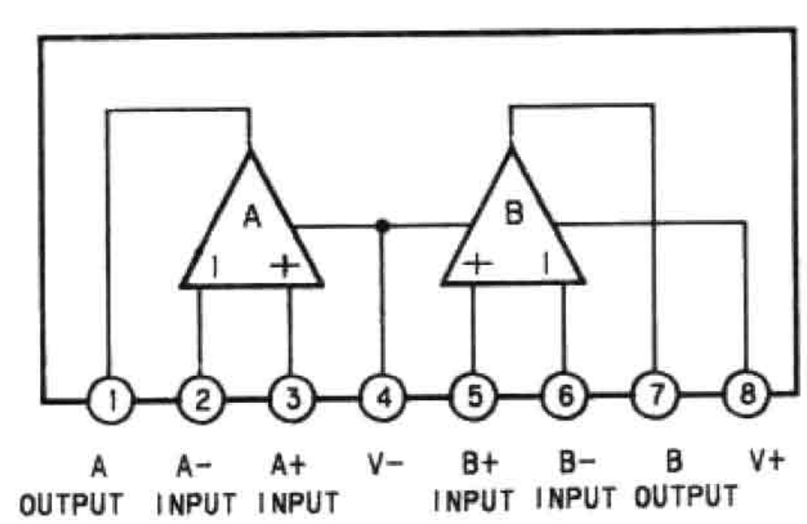

■ PRINTED CIRCUIT BOARD(Pattern side)

Notes) 文字面 :Component side

Main Circuit Board (1) (C,R,G models)

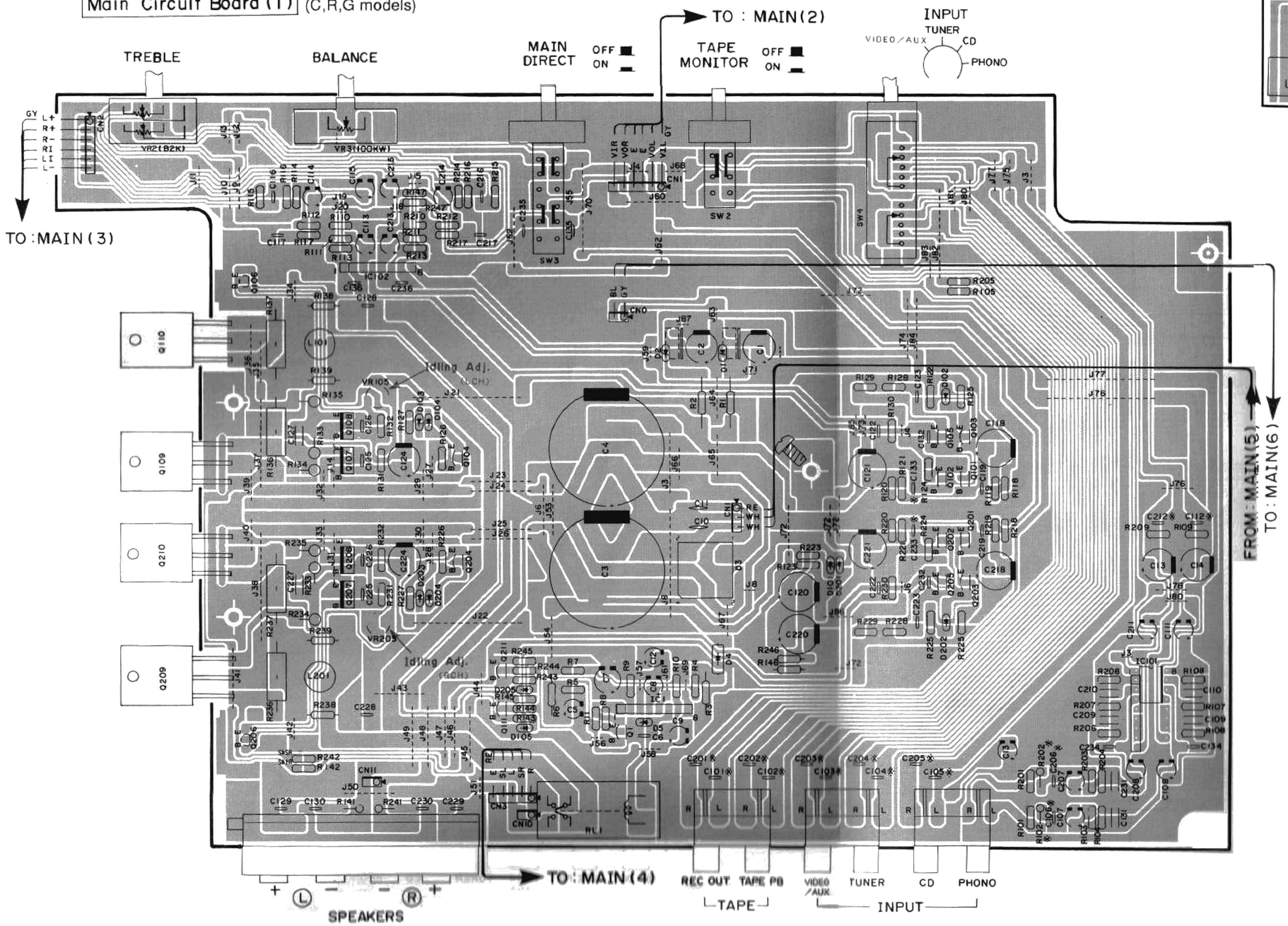

Main Circuit Board(2)

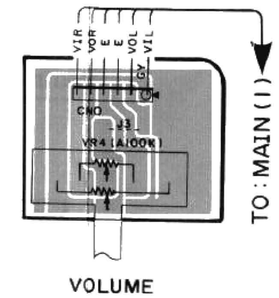

Main Circuit Board (3)

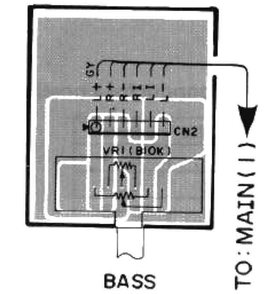

● Semiconductor Location

Ref . No	Location
IC1	C – 4
IC101	E – 4
IC102	B – 2
Q1	C – 4
Q101	E – 3
Q102	E – 3
Q103	E – 3
Q104	C – 3
Q105	E – 3
Q106	B – 3
Q107	B – 3
Q108	B – 3
Q109	A – 3
Q110	A – 3
Q111	C – 4
Q201	E – 4
Q202	E – 4
Q203	E – 4
Q204	C – 4
Q205	E – 4
Q206	B – 4
Q207	B – 4
Q208	B – 4
Q209	A – 4
Q210	A – 4
Q211	C – 4

Ref . No	Location
D1	D – 3
D2	C – 3
D3	D – 4
D4	D – 4
D5	C – 4
D101	D – 4
D102	E – 3
D103	B – 3
D104	B – 3
D105	C – 4
D201	D – 4
D202	E – 4
D203	B – 4
D204	B – 4
D205	C – 4
SW2	D – 2
SW3	C – 2
SW4	D – 2
VR1	G – 2
VR2	A – 2
VR3	B – 2
VR4	F – 2
VR105	B – 3
VR205	B – 4

Notes) ※ marks

	C,R	G
C101,104,105 112,201,204 205,212	OPEN	330P
C102,202	OPEN	680P
C106,206	OPEN	100P
C129,229	OPEN	0.0047 μ
C130,230	OPEN	0.1 μ
C133,134,233,234	OPEN	220P
R102,202	0 Ω	1.2K Ω
R141,241	OPEN	4.7 Ω
C103,203	OPEN	470P

■ PRINTED CIRCUIT BOARD(Pattern side)

● **Semiconductor Location**

Ref . No	Location
IC1	E – 4
IC2	E – 3
IC3	E – 3
IC101	G – 4
IC102	D – 3
Q1	E – 4
Q101	F – 3
Q102	F – 3
Q103	F – 3
Q104	D – 3
Q105	F – 3
Q106	C – 3
Q107	D – 3
Q108	D – 3
Q109	C – 3
Q110	C – 3
Q111	D – 5
Q150	F – 3
Q201	F – 4
Q202	F – 4
Q203	F – 4
Q204	D – 4
Q205	F – 4
Q206	C – 5
Q207	D – 4
Q208	D – 4
Q209	C – 4
Q210	C – 4
Q211	D – 4
Q250	F – 4
D3	E – 4
D4	E – 4
D5	E – 4
D102	F – 3
D103	D – 3
D104	D – 3
D105	D – 5
D151	F – 3
D152	F – 3
D202	F – 4
D203	D – 4
D204	D – 4
D205	D – 4
SW2	E – 2
SW3	E – 2
SW4	E – 2
VR2	C – 2
VR3	D – 2
VR105	D – 3
VR205	D – 4

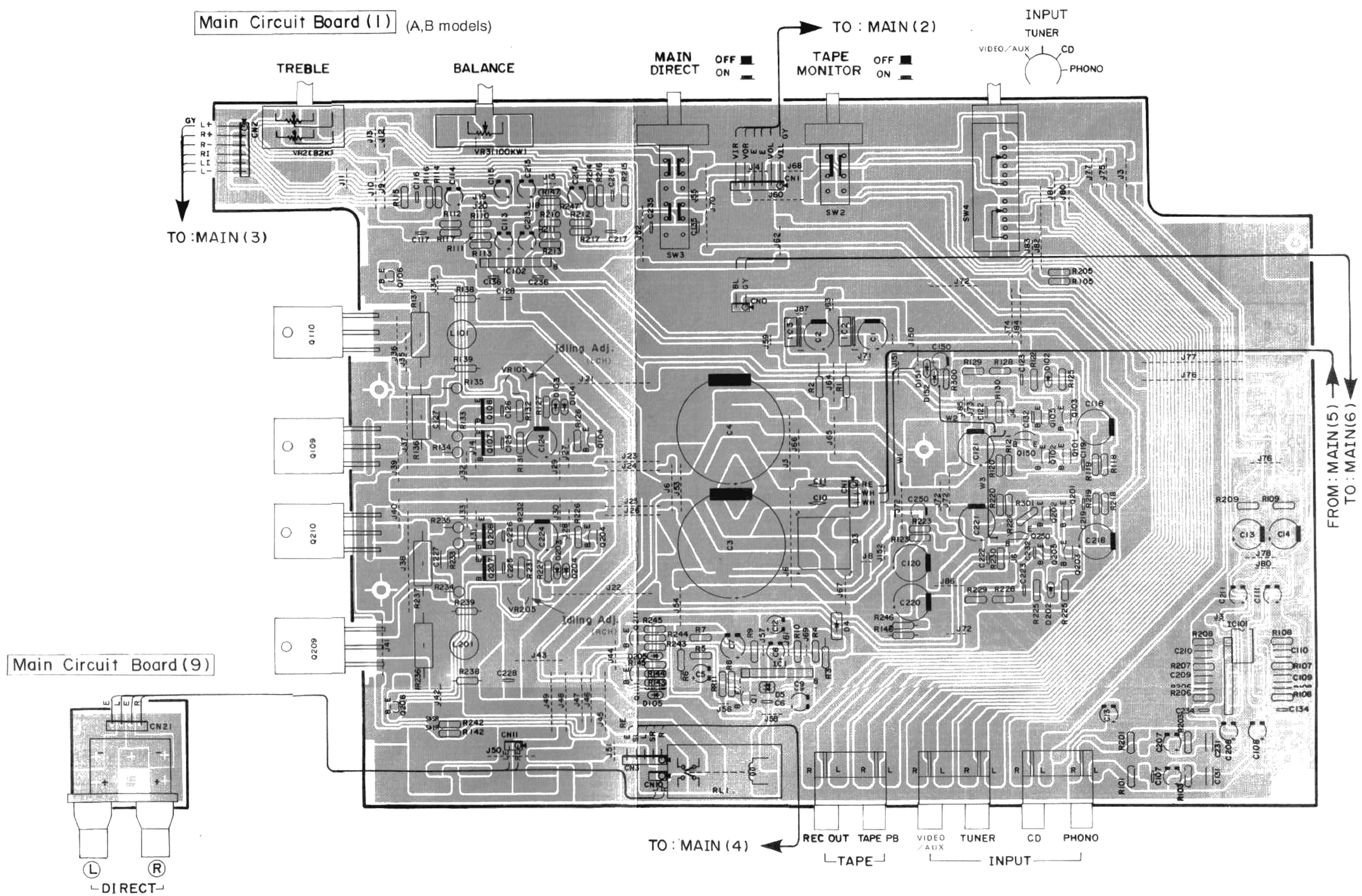

■ PRINTED CIRCUIT BOARD(Pattern side)

● R model

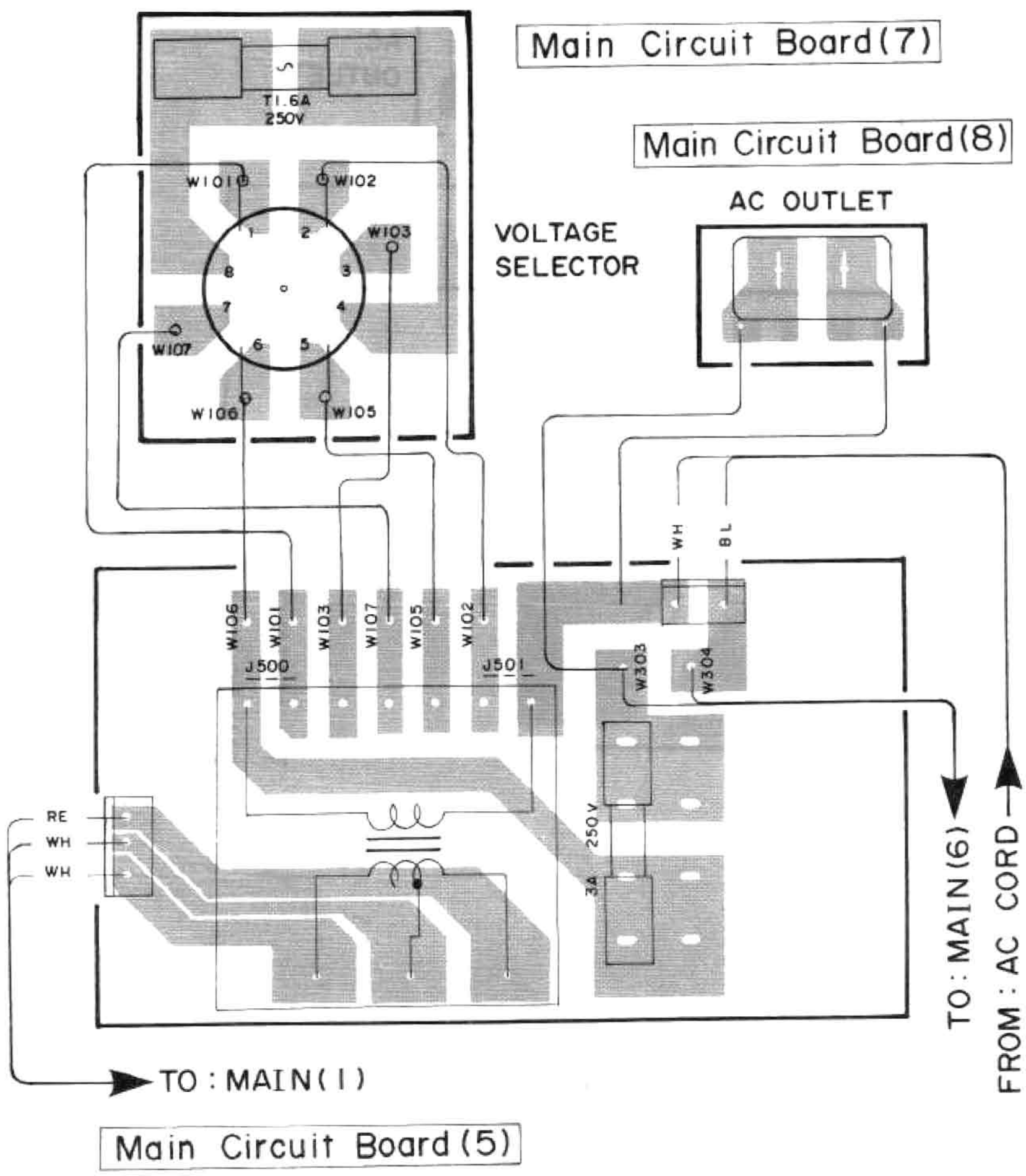

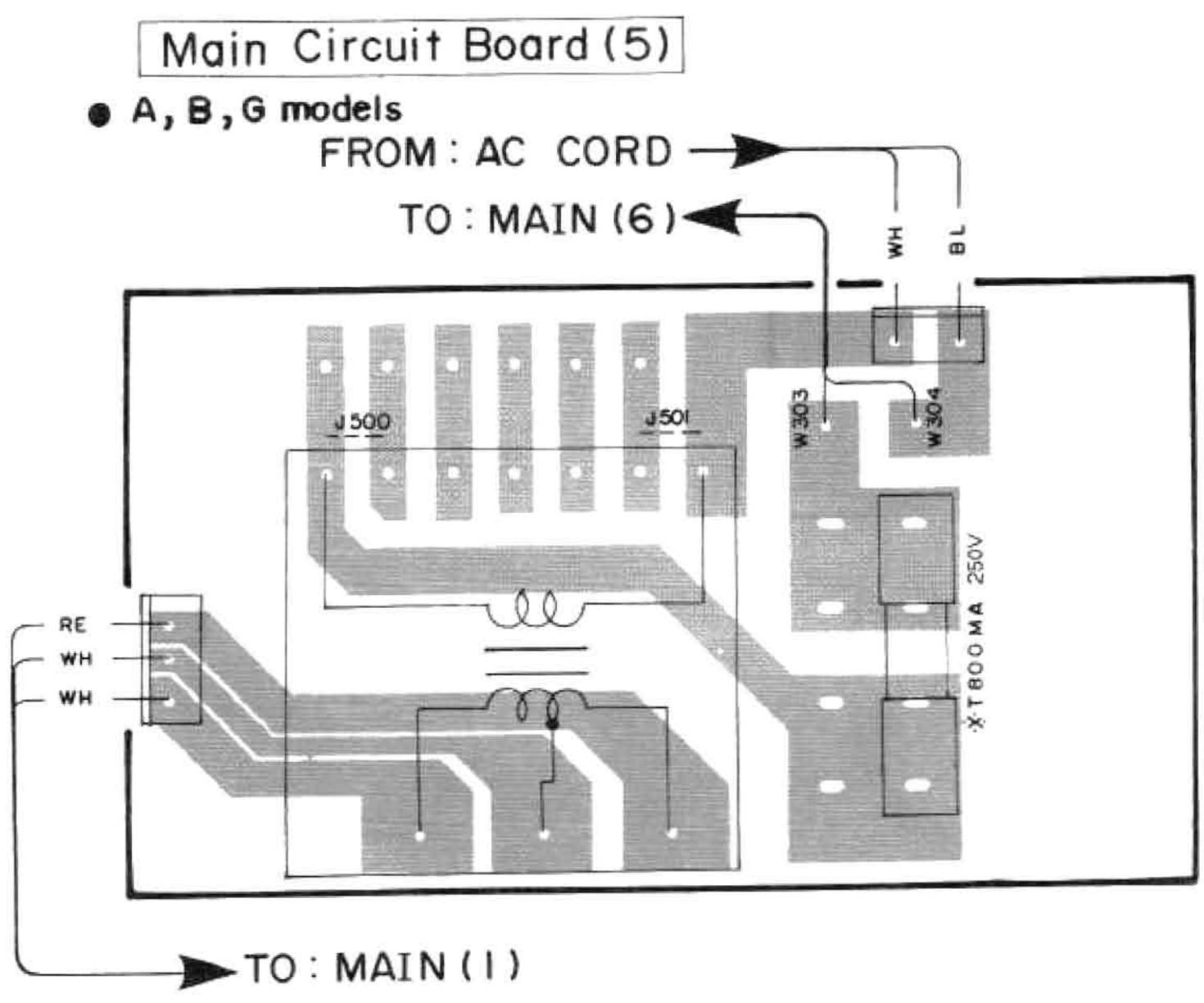

● Semiconductor Location

Ref . No	Location
SW1	D – 5
LED1	D – 5

Main Circuit Board (8)

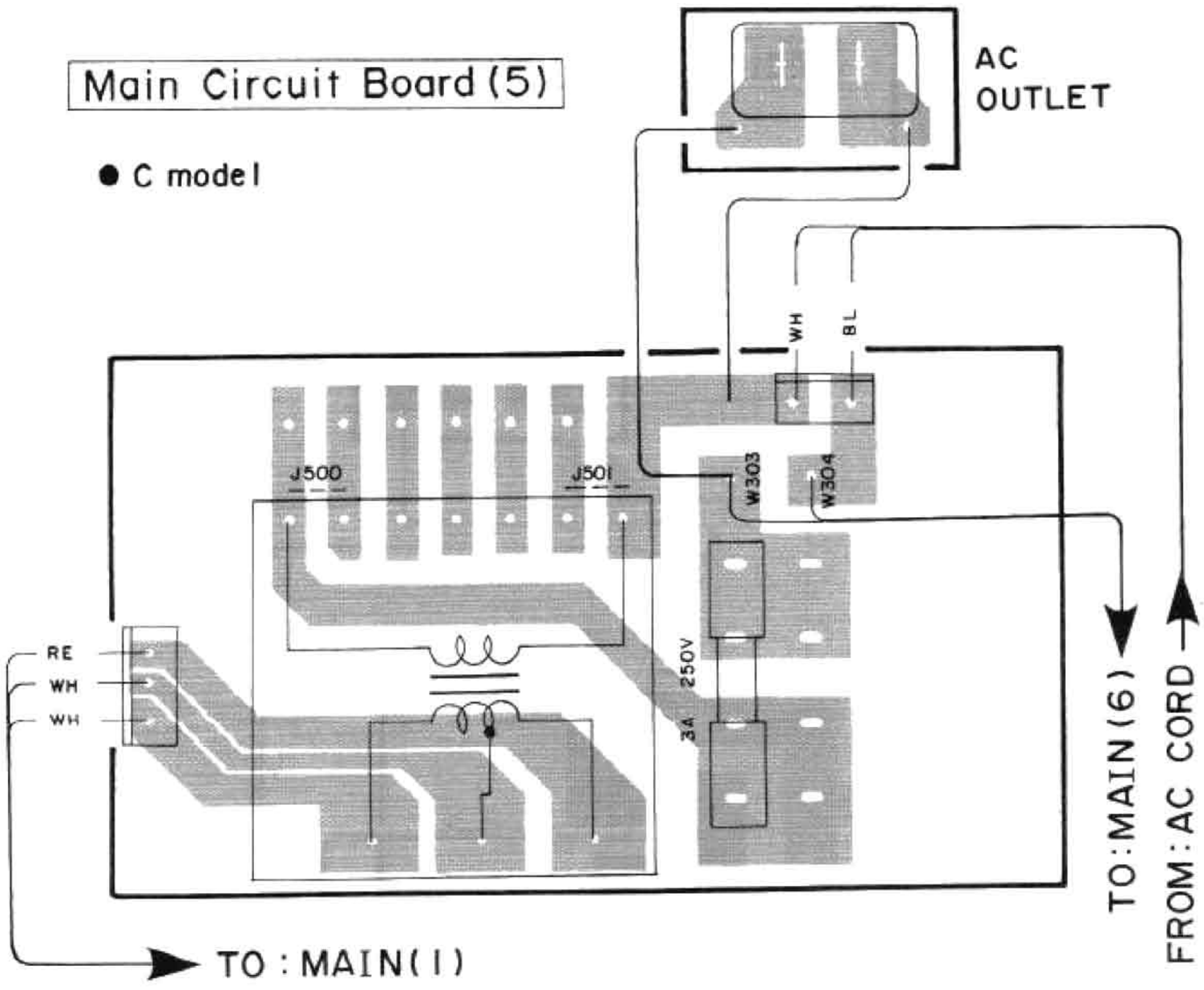

Main Circuit Board (5)

● C model

Main Circuit Board (4)

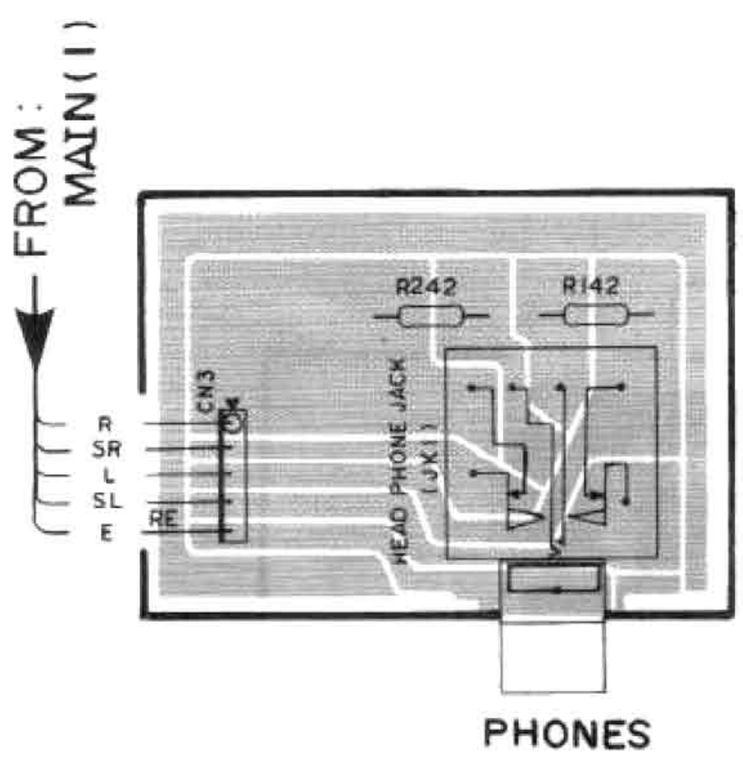

Main Circuit Board (6)

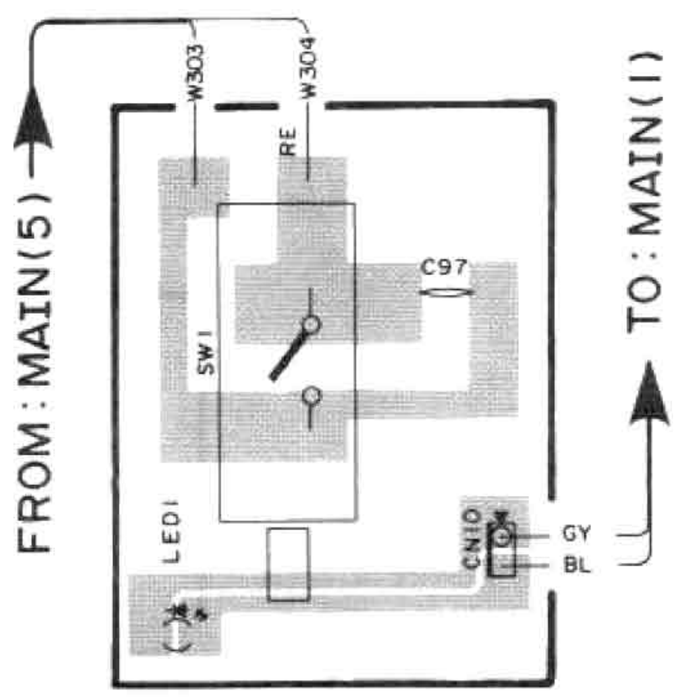

POWER

■ SCHEMATIC DIAGRAM(C,G,R models)

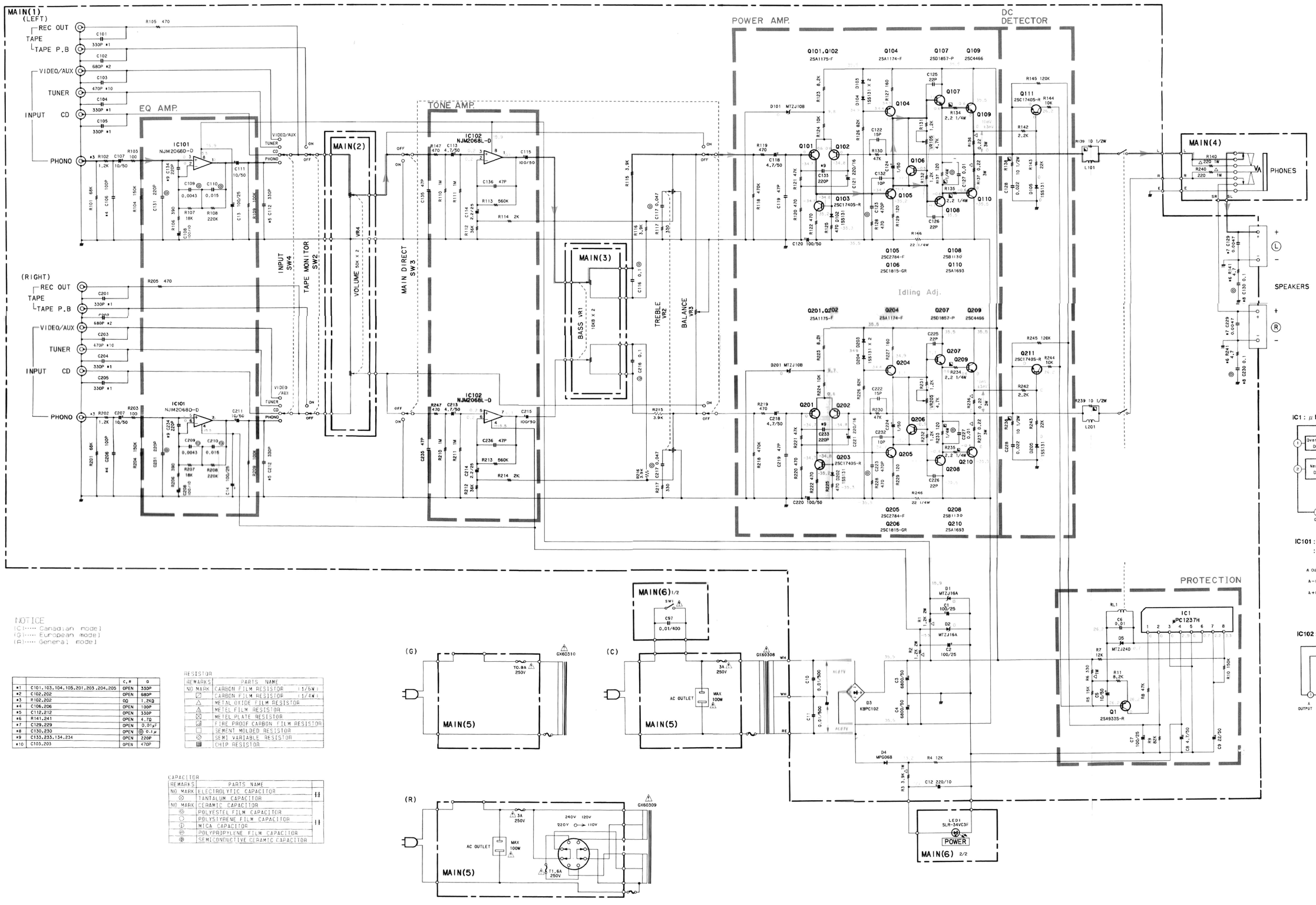

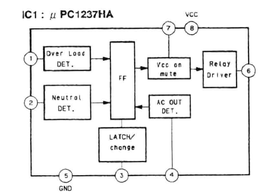

IC101 : NJM2068D-D (C,R,G models)
: NJM5532D-D (A,B models)

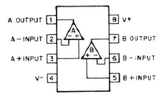

IC102 : NJM2068LD

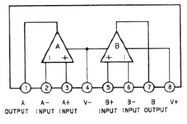

NOTICE
[C]····· Canadian model
[G]····· European model
[R]····· General model

		C, R	G
*1	C101,103,104,105,201,203,204,205	OPEN	330P
*2	C102,202	OPEN	680P
*3	R102,202	0Ω	1.2KΩ
*4	C106,206	OPEN	100P
*5	C112,212	OPEN	330P
*6	R141,241	OPEN	4.7Ω
*7	C129,229	OPEN	0.01μF
*8	C130,230	OPEN	◎ 0.1μ
*9	C133,233,134,234	OPEN	220P
*10	C103,203	OPEN	470P

RESISTOR

REMARKS	PARTS NAME
NO MARK	CARBON FILM RESISTOR (1/6W)
⊠	CARBON FILM RESISTOR (1/4W)
△	METAL OXIDE FILM RESISTOR
△	METEL FILM RESISTOR
⊠	METEL PLATE RESISTOR
▨	FIRE PROOF CARBON FILM RESISTOR
□	SEMENT MOLDED RESISTOR
⊘	SEMI VARIABLE RESISTOR
▩	CHIP RESISTOR

CAPACITOR

REMARKS	PARTS NAME	
NO MARK	ELECTROLYTIC CAPACITOR	⊟
⊗	TANTALUM CAPACITOR	⊟
NO MARK	CERAMIC CAPACITOR	⊟
◎	POLYESTEL FILM CAPACITOR	⊟
○	POLYSTYRENE FILM CAPACITOR	⊟
Ⓘ	MICA CAPACITOR	⊟
Ⓟ	POLYPROPYLENE FILM CAPACITOR	⊟
⊕	SEMICONDUCTIVE CERAMIC CAPACITOR	⊟

PIN CONNECTION DIAGRAM OF TRANSISTORS, DIODES AND ICS.

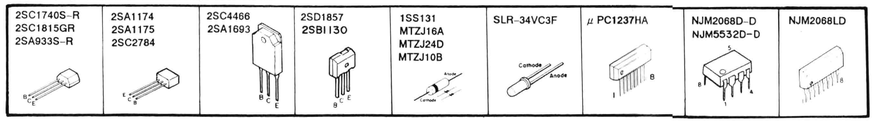

*All voltages are measured with a 10MΩ/DC electric volt meter.
*Components having special characteristics are marked ⚠ and must be replaced with parts having specifications equal to those originally installed.
*Schematic diagram is subject to change without notice.

■ SCHEMATIC DIAGRAM(A,B models)

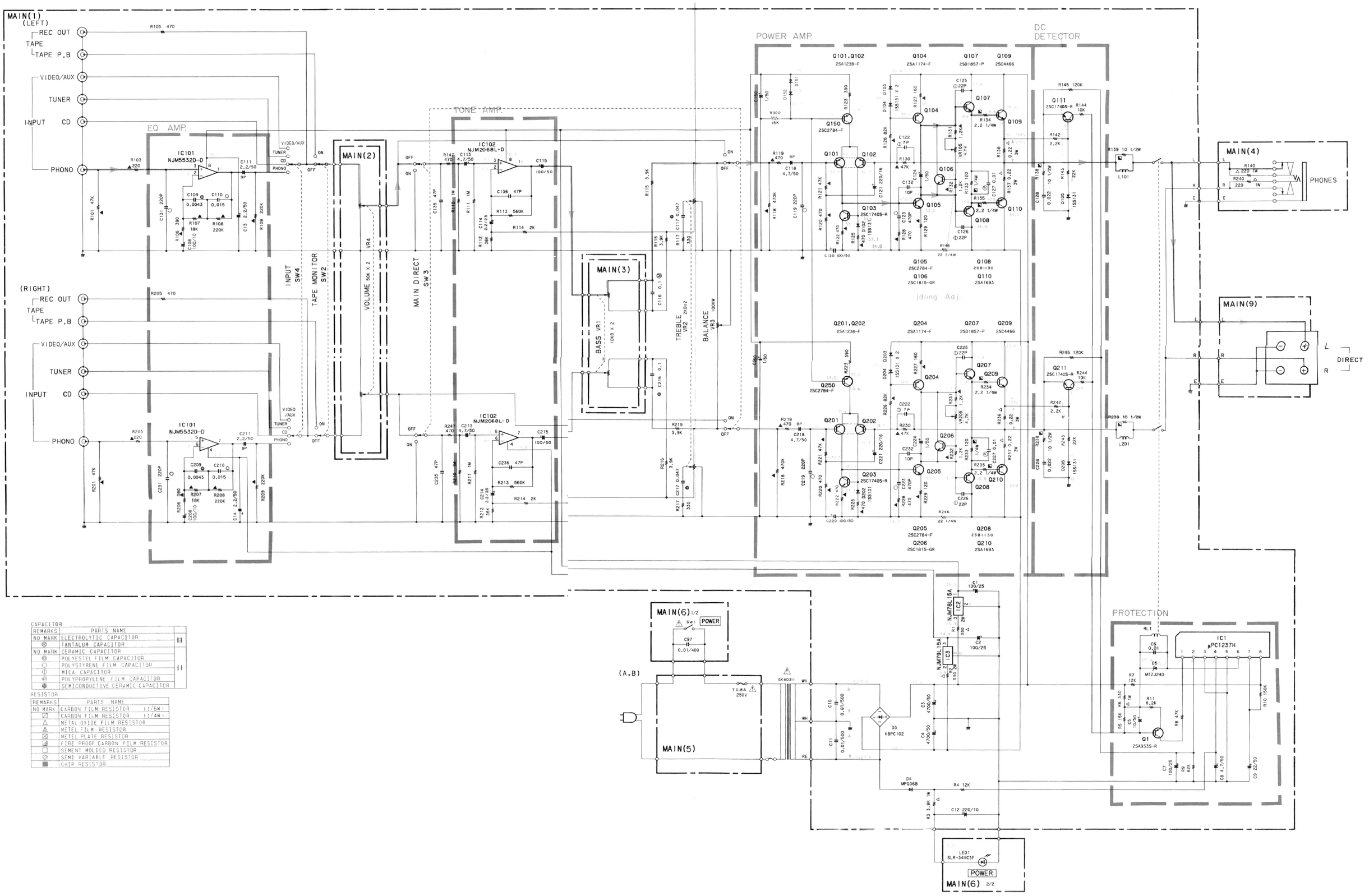

CAPACITOR

REMARKS	PARTS NAME	
NO MARK	ELECTROLYTIC CAPACITOR	
⊗	TANTALUM CAPACITOR	
NO MARK	CERAMIC CAPACITOR	
◎	POLYESTEL FILM CAPACITOR	
○	POLYSTYRENE FILM CAPACITOR	
①	MICA CAPACITOR	
⊕	POLYPROPYLENE FILM CAPACITOR	
●	SEMICONDUCTIVE CERAMIC CAPACITOR	

RESISTOR

REMARKS	PARTS NAME	
NO MARK	CARBON FILM RESISTOR	(1/6W)
⊘	CARBON FILM RESISTOR	(1/4W)
△	METAL OXIDE FILM RESISTOR	
▲	METEL FILM RESISTOR	
⊠	METEL PLATE RESISTOR	
◪	FIRE PROOF CARBON FILM RESISTOR	
□	SEMENT MOLDED RESISTOR	
⊘	SEMI VARIABLE RESISTOR	
■	CHIP RESISTOR	

PIN CONNECTION DIAGRAM OF TRANSISTORS, DIODES AND ICS.

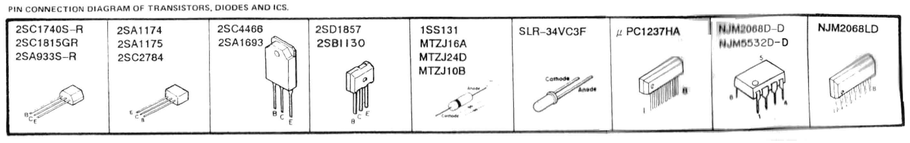

* All voltages are measured with a 10MΩ/DC electric volt meter.
* Components having special characteristics are marked ⚠ and must be replaced with parts having specifications equal to those originally installed.
* Schematic diagram is subject to change without notice.

PARTS LIST

■ ELECTRICAL PARTS

■ **WARNING**

Components having special characteristics are marked ⚠ and must be replaced with parts having specifications equal to those originally installed.

- Carbon resistors 1/4 W are not included in the ELECTRICAL PARTS list. For the parts No. of the carbon resistor, refer to P.19

	Ref. No.	Part No.	Description		部品名	Remarks/markets	Common Model		ランク
※		NX 60 86 60	**Main Circuit Board**		メインシート	C		050-630-06	
※		NX 60 86 70	〃		〃	R		050-630-07	
※		NX 60 86 80	〃		〃	G		050-630-08	
※		NX 60 86 90	〃		〃	A,B		050-630-09	
		FG 21 11 00	Ceramic Cap	10pF 50V	セラコン	C132,232			
		FG 21 11 50	〃	15pF 50V	〃	C122,222 C,R,G			
		FU 35 07 00	Mica Cap.	7pF 500V	マイカコン	C122,222 A,B			
		FG 21 12 20	Ceramic Cap	22pF 50V	セラコン	C125,126,225,226 C,R,G			
		FU 35 12 20	Mica Cap.	22pF 500V	マイカコン	C125,126,225,226 A,B			
		FG 21 14 70	Ceramic Cap	47pF 50V	セラコン	C135,136,235,236			
		FD 35 22 20	Polystyrene Film Cap	220pF 50V	スチコン	C119,219 A,B			
		FG 21 14 70	Ceramic Cap	47pF 50V	セラコン	C119,219 C,R,G			
		FG 21 21 00	〃	100pF 50V	〃	C106,206 G			
		FG 21 22 20	〃	220pF 50V	〃	C134,234,133,233 G			
		FG 21 23 30	〃	330pF 50V	〃	C101,103,104,105,112,201,203,204,205,212 G			
		FG 21 26 80	〃	680pF 50V	〃	C102,202 G			
		FG 21 34 70	〃	0.0047μF 50V	〃	C129,229 G			
		FG 24 41 00	〃	0.01μF 50V	〃	C6			
		FG 24 42 20	〃	0.022μF 50V	〃	C128,228			
		Fi 50 41 00	〃	0.01μF 400V	〃	C97			
		FH 23 41 00	〃	0.01μF 500V	〃	C10,11			
		FX 60 34 70	Mylar Cap	220pF 50V	マイラー	C131,231 C,R,G			
		FD 35 22 20	Polystyrene Film Cap.	220pF 50V	スチコン	C131,231 A,B			
		UA 25 24 70	Mylar Cap	470pF 50V	マイラー	C123,223 C,R,G			
		FD 35 24 70	Polystyrene Film Cap.	470pF 50V	スチコン	C123,223 A,B			
		UA 25 34 30	Mylar Cap	0.0043μF 50V	マイラー	C109,209			
		UA 25 41 00	〃	0.01μF 50V	〃	C127,227 C,R,G			
		FT 46 41 00	Polypropylene Cap.	0.01μF 50V	ポリプロコン	C127,227 A,B			
		UA 25 41 50	Mylar Cap	0.015μF 50V	マイラー	C110,210 C,R,G			
		FD 15 41 50	Polystyrene Film Cap.	0.015μF 50V	スチコン	C110,210 A,B			
		UA 25 44 70	Mylar Cap	0.047μF 50V	マイラー	C117,217			
		UA 25 51 00	〃	0.1μF 50V	〃	C116,216			
		UA 25 51 00	〃	0.1μF 50V	〃	C130,230 G			
		UJ 66 61 00	Electrolytic Cap	1μF 50V	ケミコン	C124,224 C,R,G			
		VG 29 13 00	〃	100μF 50V	〃	C124,224 A,B			
		VG 29 05 00	〃	1μF 50V	〃	C150,250 A,B			
		UJ 66 64 70	〃	4.7μF 50V	〃	C8,113,118,213,218 C,R,G			
		UJ 66 64 70	〃	4.7μF 50V	〃	C8,113,213 A,B			
		UK 16 64 70	〃	4.7μF 50V	〃	C118,218 A,B			
		UJ 66 71 00	〃	10μF 50V	〃	C107,111,115,207,211,215 C,R,G			
		UJ 66 71 00	〃	10μF 50V	〃	C5 A,B			
		FM 11 62 20	〃	2.2μF 50V	〃	C111,211 A,B			
		UJ 16 72 20	〃	22μF 50V	〃	C9			
		UW 64 62 20	〃	2.2μF 25V	〃	C114,214			
		UJ 12 81 00	〃	100μF 10V	〃	C108,208 C,R,G			
		VG 28 76 00	〃	100μF 16V	〃	C108,208 A,B			
		UJ 64 81 00	〃	100μF 25V	〃	C1,2,7,13,14 C,R,G			
		VE 01 87 00	〃	100μF 25V	〃	C1,2 A,B			
		UJ 64 81 00	〃	100μF 25V	〃	C7 A,B			
		UW 67 62 20	〃	2.2μF 63V	〃	C13,14 A,B			
		UJ 66 81 00	〃	100μF 50V	〃	C120,115,215,220			
		UJ 12 82 20	〃	220μF 10V	〃	C12			
		UJ 63 82 20	〃	220μF 16V	〃	C121,221 C,R,G			

※New Parts（新規部品）NR

	Ref. No.	Part No.	Description		部品名	Remarks/markets	Common Model		ランク
		VG 28 77 00	Electrolytic Cap	220μF 16V	ケミコン	C121,221			
		FX 60 42 90	〃	6800μF 50V	〃	C3,4 C,R,G			
		FX 60 45 60	〃	4700μF 50V	〃	C3,4 A,B			
		LX 60 24 70	Speaker Terminal		スピーカーターミナル	C,R		050-42325-01	
※		LX 60 49 10	〃		〃	G		050-42325-02	
※		LX 60 49 00	〃		〃	A,B		050-43578-01	
		LX 60 21 70	Pin Jack	4P	ピンジャック			050-43416-01	
		KX 60 18 60	Switch		スイッチ	S1		050-43216-01	⚠
		KX 60 18 70	Rotary Switch	SRRZ-S 4-4	ロータリースイッチ	S4		050-43458-01	
		KX 60 18 80	Switch	SPUL 2	スイッチ	S2		050-43515-01	
		KX 60 18 90	〃	SPUL 4	〃	S3		050-43460-01	
		HX 60 31 70	Pre-Set Potentiometer		半固定抵抗	VR105,205		050-42388-04	
※		HX 60 48 00	Potentiometer	特50KΩ×2	可変抵抗器	VR4		050-43454-02	
		HX 60 31 40	〃	W100KΩ	〃	VR3		050-43455-01	
		HX 60 31 50	〃	B10KΩ×2	〃	VR1		050-43456-01	
		HX 60 31 60	〃	B2KΩ×2	〃	VR2		050-43457-01	
		iX 61 53 50	Transistor	2SD1857	トランジスタ	Q107,207		278-41857-17	
		iX 61 53 60	〃	2SB1130	〃	Q108,208		278-21236-17	
※		iX 61 53 70	〃	2SC2784	〃	Q105,205		278-32784-07	
※		iX 61 53 80	〃	2SA1174	〃	Q104,204		278-11174-07	
		iX 61 53 90	〃	2SA1175	〃	Q101,102,201,202 C,R,G		278-11175-07	
※		iX 61 53 90	〃	2SA1175	〃	Q150,250 A,B		278-11175-07	
※		iX 61 54 80	〃	2SA1238F	〃	Q101,102,201,202 A,B		078-11238-07	
		iX 60 71 40	〃	2SC1740S-R	〃	Q103,203,111,211		278-31740-84	
		iA 09 33 60	〃	2SA933S-R	〃	Q1		278-10933-84	
		iX 61 42 50	〃	2SC1815GR	〃	Q106,206		078-31815-31	
		iX 61 42 30	〃	2SC4466	〃	Q109,209		078-34466-02	
		iX 61 42 40	〃	2SA1693	〃	Q110,210		078-11693-02	
		iX 61 42 60	Diode	KBPC102	ダイオード	D3		078-50404-01	
		iX 61 24 70	〃	MPG06B	〃	D4		078-50359-01	
		iX 61 25 10	〃	1SS131	〃	D102～105,202～205		278-50344-01	
		iX 61 25 10	〃	1SS131	〃	D151,152 A,B		278-50344-01	
		iX 61 54 00	Zener Diode	MTZJ24D	ツェナダイオード	D5		278-50362-65	
		iX 61 54 10	〃	MTZJ16A	〃	D1,2		278-50362-48	
		iX 61 54 20	〃	MTZJ10B	〃	D101,201		278-50362-33	
		iX 61 55 20	LED	SLR-34VC5F	LED	LED1		078-50308-02	
		iX 61 42 10	IC	UPC1237H	IC	IC1		078-00151-01	
		iX 60 86 70	〃	NJM2068D-D	〃	IC101 C,R,G		078-00335-05	
※		iX 61 55 10	〃	NJM5532D-D	〃	IC101 A,B		078-00658-05	
		iX 61 42 20	〃	NJM2068LD	〃	IC102		078-00627-05	
※		iX 61 54 90	〃	NJM78L15A	〃	IC2 A,B		078-00541-15	
※		iX 61 55 00	〃	NJM79L15A	〃	IC3 A,B		078-00542-15	
		LX 60 25 00	Phone Jack	M1659-AEAA	ヘッドホンジャック			050-43479-01	
		XX 69 13 00	Relay	DH2TU 24VC	リレー	RL1		050-42487-01	

※New Parts（新規部品）NR

Ref. No.	Part No.	Description		部品名	Remarks/Markets	Common Model		ランク
	LX 60 25 10	Coil		コイル	L101,102 C,R,G		050-41433-01	
	VC 79 37 00	〃		〃	L101,102 A,B		050-43747-01	
	HL 32 61 20	Metal Oxide Film Resistor	1.2KΩ 2W	酸金抵抗	R1,2 C,R,G		050-42908-46	
	HL 32 53 30	〃	330Ω 2W	〃	R1,2 A,B		050-42908-39	
	HL 31 53 30	〃	330Ω 1W	〃	R6		050-42907-39	
	HL 31 52 20	〃	220Ω 1W	〃	R140,240		050-42907-39	
	HL 31 63 90	〃	3.9KΩ 1W	〃	R3		050-42907-52	
	HL 93 22 20	〃	0.22Ω 3W	〃	R136,137,236,237		050-43516-01	
	HX 60 19 30	Flam Proof Carbon Resistor	10Ω 1/2W	不燃化カーボン抵抗	R138,139,238,239		050-42911-17	
	HV 45 32 20	〃	2.2Ω 1/4W	〃	R134,135,234,235		050-43517-09	
	HV 45 51 20	〃	120Ω 1/4W	〃	R133,233		050-43517-30	
	HV 45 42 20	〃	22Ω 1/4W	〃	R146,246		050-43517-21	
	HJ 35 73 60	Carbon Film Resistor	36KΩ 1/4W	カーボン抵抗	R112,212			
	iL 00 05 70	Mica Base		マイカベース			050-42079-01	
	LX 60 26 00	Fuse Clip		ヒューズクリップ			050-42460-01	
	KX 60 19 10	Fuse	3.0A 250V	ヒューズ	C,R		050-41115-18	⚠
	KX 60 19 00	〃	1.6A	〃	R		050-41115-05	⚠
※	KX 60 29 20	〃	0.8A	〃	A,B,G		050-41115-03	
	LX 60 22 20	AC Outlet		アウトレット	C,R		050-42204-01	⚠
	XX 69 37 10	Switch		スイッチ	R		050-42565-01	
	XX 67 12 60	Condenser Cover		コンデンサーカバー	A,B,G		060-41487-01	
	HU 57 74 70	Metal Film Resistor	47KΩ 1/4W	金属皮膜抵抗	R101,201,121,221			
	HU 57 52 20	〃	220Ω 1/4W	〃	R103,203			
	HU 57 53 90	〃	390Ω 1/4W	〃	R106,206			
	HU 57 71 80	〃	18KΩ 1/4W	〃	R107,207			
	HU 59 82 20	〃	220KΩ 1/4W	〃	R108,208,109,209			
	HU 57 84 70	〃	470KΩ 1/4W	〃	R118,218			
	HU 57 54 70	〃	470Ω 1/4W	〃	R120,220,122,222 125,225,128,228			
	HU 57 78 20	〃	82KΩ 1/4W	〃	R126,226			
	HU 57 51 60	〃	160Ω 1/4W	〃	R127,227			
	HU 57 51 20	〃	120Ω 1/4W	〃	R129,229			
	HU 57 61 20	〃	1.2KΩ 1/4W	〃	R131,231,132,232			
	HU 57 71 50	〃	15KΩ 1/4W	〃	R300			
	GX 60 30 80	Power Transformer		電源トランス	C	AX-330	050-43475-01	
	GX 60 30 90	〃		〃	R	〃	050-43476-01	
	GX 60 31 00	〃		〃	G	〃	050-43345-01	
	GX 60 31 10	〃		〃	A,B	〃	050-43477-01	
	BX 60 12 20	Heat Sink		放熱板		AX-330	060-31546-01	
	AX 60 54 00	Hexagon, Head Screw	3×10 MFZN2	六角ネジ			097-40125-01	

※New Parts（新規部品）NR

■ EXPLODED VIEW

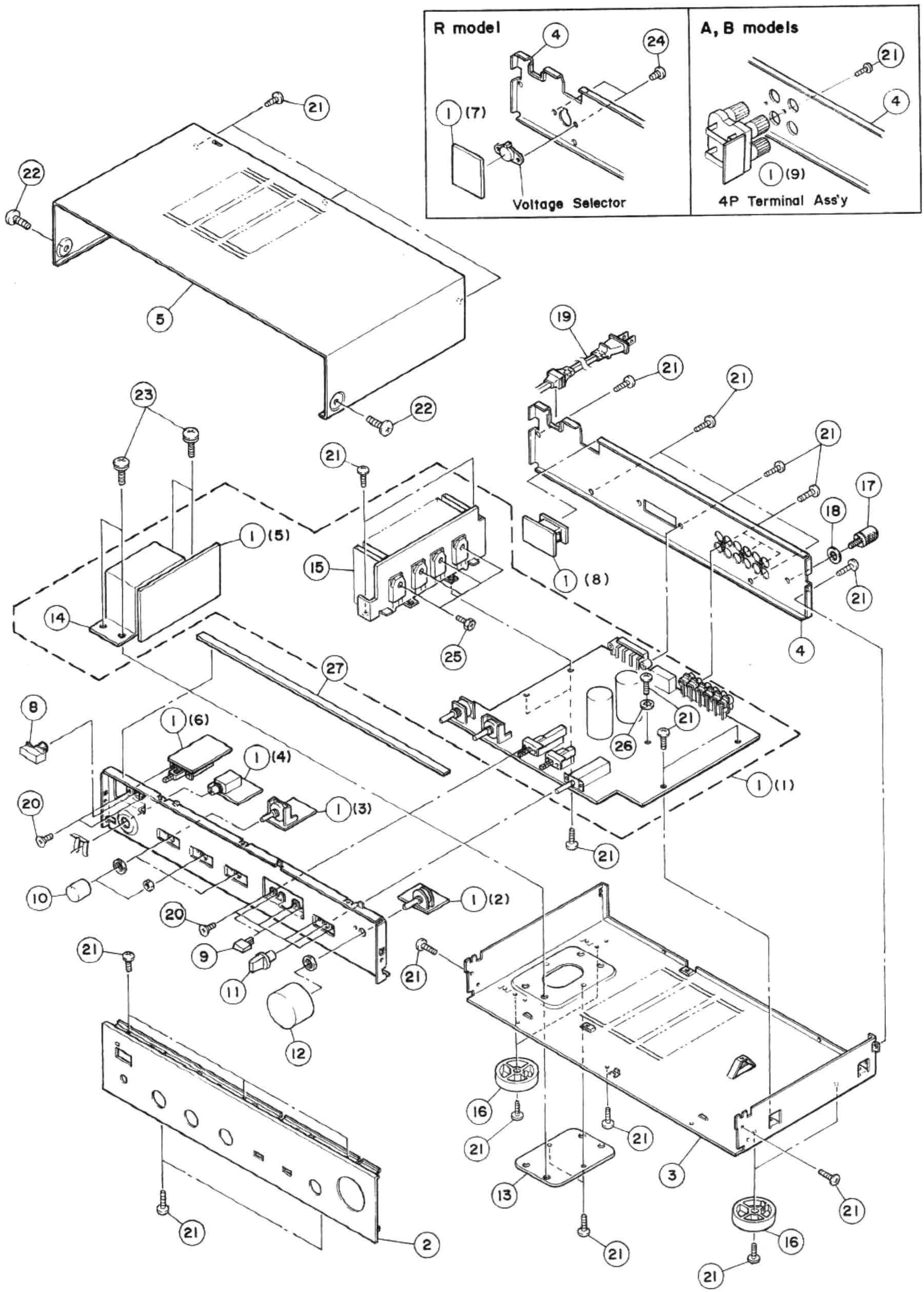

■ MECHANISM PARTS

Notes) ϕ : Diameter

	Ref. No.	Part No.	Description		部品名	Remarks/markets	Common Model		ランク
※	1	NX 60 86 60	Main Circuit Board		メインシート	C		050-630-06	
※	//	NX 60 86 70	//		//	R		050-630-07	
※	//	NX 60 86 80	//		//	G		050-630-08	
※	//	NX 60 86 90	//		//	A,B		050-630-09	
※	2	AX 61 13 90	Front Panel		フロントパネル	Black			
※	//	AX 61 14 00	//		//	Titan			
※	3	CX 61 52 90	Bottom Case		ボトム			060-10897-01	
※	4	AX 61 14 10	Rear Panel		リアパネル	C		060-22209-06	
※	//	AX 61 14 20	//		//	R		060-22209-07	
※	//	AX 61 14 30	//		//	G		060-22209-08	
※	//	AX 61 14 40	//		//	A,B		060-22209-09	
	5	AX 60 53 70	Cabinet		キャビネット	Black	AX-330	060-21397-11	
※	//	AX 61 14 50	//		//	Titan		060-21397-16	
	8	CX 61 31 40	Button	10×25	ボタン	Black		060-43873-01	
※	//	CX 61 53 00	//	10×25	//	Titan		060-43873-02	
	9	VH 81 60 00	//	3×14	//	Black		060-31663-01	
	//	VH 81 61 00	//	3×14	//	Titan		060-31663-02	
	10	VH 88 92 00	Knob	D14	ツマミ	Black		060-44142-01	
	//	VH 88 93 00	//	D14	//	Titan		060-44142-02	
	11	VH 81 58 00	Selector Knob	D16	セレクターツマミ	Black		060-44143-01	
	//	VH 81 59 00	//	D16	//	Titan		060-44143-02	
	12	Vi 06 53 00	Knob	D40	ツマミ	Black		060-44144-01	
	//	Vi 06 54 00	//	D40	//	Titan		060-44144-02	
	13	AX 60 53 90	Trans Frame		トランスフレーム			060-43356-01	
	14	GX 60 30 80	Power Transformer		電源トランス	C	AX-330	050-43475-01	⚠
	//	GX 60 30 90	//		//	R	//	050-43476-01	⚠
	//	GX 60 31 00	//		//	G	//	050-43345-01	⚠
	//	GX 60 31 10	//		//	A,B	//	050-43477-01	⚠
	15	BX 60 12 20	Heat Sink		放熱板		//	060-31546-01	
	16	VF 63 94 00	LEG		脚	Black		060-43638-01	
	//	Vi 03 16 00	//		//	Titan		060-43638-02	
	17	XX 69 11 80	Eirth Terminal		アースターミナル		AVC-30	060-42661-01	
	18	XX 69 36 00	Washer	t0.5×ϕ3×ϕ10	ワッシャー			097-40045-01	
※	19	MX 60 29 70	AC Power Cord		電源コード	C		050-43731-01	⚠
	//	MX 60 10 60	//		//	R		050-43080-01	⚠
	//	MX 60 10 70	//	DEP-101	//	G		050-42852-01	⚠
	//	MX 60 10 80	//		//	A		050-42965-01	⚠
	//	MX 60 10 90	//		//	B		050-42905-01	⚠
	20	EB 03 00 56	Flat Head Screw	3×5 ZMCZ-Y	皿小ネジ	PACK		088-13005-01	
	21	Ei 33 00 86	Binding Head Tapping Screw	3×8 FCRM3-B1	バインドタッピングネジ	PACK		097-40014-13	
	22	Ei 34 00 86	//	4×8 FCRM3-B1	//	PACK		097-40015-04	
	23	EH 34 01 09	Pan Head Screw With Washer	4×10 FCMB1	セムスナベ小ネジ			097-40138-01	
	24	EA 33 00 56	Pan Head Screw	3×5 FCRM3-B1	ナベ小ネジ	PACK R		088-63005-05	
※	25	AX 60 54 00	Hexagon, Head Screw	3×10 MFZN2	六角ネジ			097-40125-01	
	26	EV 42 20 36	Toothed Lock Washer B	ϕ3 FCRM3-3G	歯付座金	PACK		083-80300-01	
※	27	CX 60 82 70	Cushion		クッション			060-43001-01	

※New Parts（新規部品）NR

Parts List for Carbon Resistors
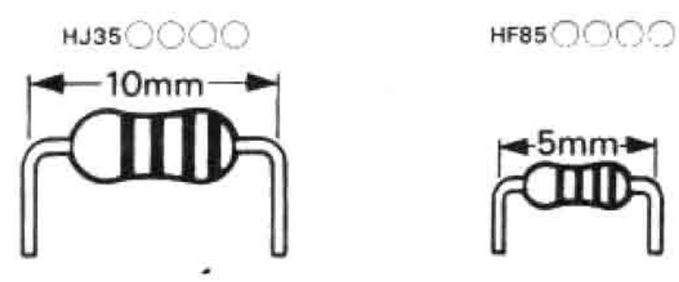
Value	1/4W Type Part No.	1/6W Type Part No.	Value	1/4W Type Part No.	1/6W Type Part No.
1.0 Ω	HJ353100	※	12KΩ	HJ357120	HF857120
1.8 〃	HJ353180	※	15 〃	HJ357150	HF857150
2.2 〃	HJ353220	HF853220	18 〃	HJ357180	HF857180
3.3 〃	HJ353330	HF853330	22 〃	HJ357220	HF857220
4.7 〃	HJ353470	HF853470	27 〃	HJ357270	HF857270
5.6 〃	HJ353560	HF853560	33 〃	HJ357330	HF857330
10 〃	HJ354100	HF854100	39 〃	HJ357390	HF857390
15 〃	HJ354150	HF854150	47 〃	HJ357470	HF857470
22 〃	HJ354220	HF854220	56 〃	HJ357560	HF857560
27 〃	HJ354270	HF854270	68 〃	HJ357680	HF857680
33 〃	HJ354330	HF854330	82 〃	HJ357820	HF857820
39 〃	HJ354390	HF854390	91 〃	HJ357910	HF857910
47 〃	HJ354470	HF854470	100 〃	HJ358100	HF858100
56 〃	HJ354560	HF854560	120 〃	HJ358120	HF858120
68 〃	HJ354680	HF854680	150 〃	HJ358150	HF858150
82 〃	HJ354820	HF854820	180 〃	HJ358180	HF858180
100 〃	HJ355100	HF855100	220 〃	HJ358220	HF858220
110 〃	HJ355110	HF855110	270 〃	HJ358270	HF858270
120 〃	HJ355120	HF855120	330 〃	HJ358330	HF858330
150 〃	HJ355150	HF855150	390 〃	HJ358390	HF858390
160 〃	HJ355160	※	470 〃	HJ358470	HF858470
180 〃	HJ355180	HF855180	560 〃	HJ358560	HF858560
220 〃	HJ355220	HF855220	680 〃	HJ358680	HF858680
270 〃	HJ355270	HF855270	820 〃	HJ358820	HF858820
330 〃	HJ355330	HF855330	1.0MΩ	HJ359100	HF859100
390 〃	HJ355390	HF855390	1.2 〃	HJ359120	※
470 〃	HJ355470	HF855470	1.5 〃	HJ359150	HF859150
510 〃	※	HF855510	1.8 〃	HJ359180	HF859180
560 〃	HJ355560	HF855560	2.2 〃	HJ359220	HF859220
680 〃	HJ355680	HF855680	3.3 〃	HJ359330	HF859330
820 〃	HJ355820	HF855820	3.9 〃	HJ359390	※
910 〃	HJ355910	HF855910	4.7 〃	HJ359470	※
1.0KΩ	HJ356100	HF856100			
1.2 〃	HJ356120	HF856120			
1.5 〃	HJ356150	HF856150			
1.8 〃	HJ356180	HF856180			
2.0 〃	HJ356200	HF856200			
2.2 〃	HJ356220	HF856220			
2.4 〃	HJ356240	HF856240			
2.7 〃	HJ356270	HF856270			
3.0 〃	HJ356300	HF856300			
3.3 〃	HJ356330	HF856330			
3.6 〃	HJ356360	HF856360			
3.9 〃	HJ356390	HF856390			
4.7 〃	HJ356470	HF856470			
5.1 〃	HJ356510	HF856510			
5.6 〃	HJ356560	HF856560			
6.8 〃	HJ356680	HF856680			
8.2 〃	HJ356820	HF856820			
9.1 〃	HJ356910	HF856910			
10 〃	HJ357100	HF857100