COMPACT DISC PLAYER

CDX-520/CD-1050

SERVICE MANUAL

CDX-520/
CD-1050

IMPORTANT NOTICE

This manual has been provided for the use of authorized Yamaha Retailers and their service personnel. It has been assumed that basic service procedures inherant to the industry, and more specifically Yamaha Products, are already known and understood by the users, and have therefore not been restated.

WARNING: Failure to follow appropriate service and safety procedures when servicing this product may result in personal injury, destruction of expensive components and failure of the product to perform as specified. For these reasons, we advise all Yamaha product owners that all service required should be performed by an authorized Yamaha Retailer or the appointed service representative.

IMPORTANT: The presentation or sale of this manual to any individual or firm does not constitute authorization, certification or recognition of any applicable technical capabilities, or establish a principle-agent relationship of any form.

The data provided is believed to be accurate and applicable to the unit(s) indicated on the cover. The research, engineering, and service departments of Yamaha are continually striving to improve Yamaha products. Modifications are, therefore, inevitable and specifications are subject to change without notice or obligation to retrofit. Should any discrepancy appear to exist, please contact the distributor's Service Division.

WARNING: Static discharges can destroy expensive components. Discharge any static electricity your body may have accumulated by grounding yourself to the ground buss in the unit (heavy gauge black wires connect to this buss).

IMPORTANT: Turn the unit OFF during disassembly and parts replacement. Recheck all work before you apply power to the unit.

CONTENTS

100245

YAMAHA

YAMAHA CORPORATION
P.O.Box 1, Hamamatsu, Japan

3.7K-263 Printed in Japan '89.1

TO SERVICE PERSONNEL

1. Critical Components Information.
   Components having special characteristics are marked and must be replaced with parts having specifications equal to those originally installed.

2. Leakage Current Measurement (For 120V Model Only).
   When service has been completed, it is imperative that you verify that all exposed conductive surfaces are properly insulated from supply circuits.

- Meter impedance should be equivalent to 1500 ohm shunted by 0.15μF
- Leakage current must not exceed 0.5mA.
- Be sure to test for leakage with the AC plug in both polarities.
- **POLARIZATION (U. C models)**
  This CD player product is equipped with a polarized alternating-current line plug (a plug having one blade wider than the other). This plug will fit into the power outlet only one way. This is a safety feature.

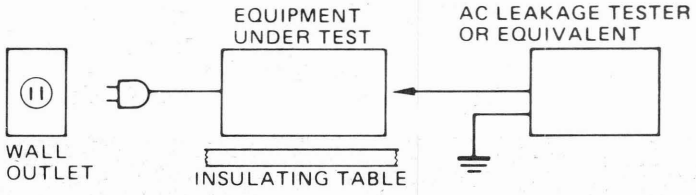

CAUTION – USE OF CONTROLS, ADJUSTMENTS, OR PERFORMANCE OF PROCEDURES OTHER THAN THOSE SPECIFIED HEREIN, MAY RESULT IN HAZARDOUS RADIATION EXPOSURE.

THE COMPACT DISC PLAYER SHOULD NOT BE ADJUSTED OR REPAIRED BY ANYONE EXCEPT PROPERLY QUALIFIED SERVICE PERSONNEL.

G. B models

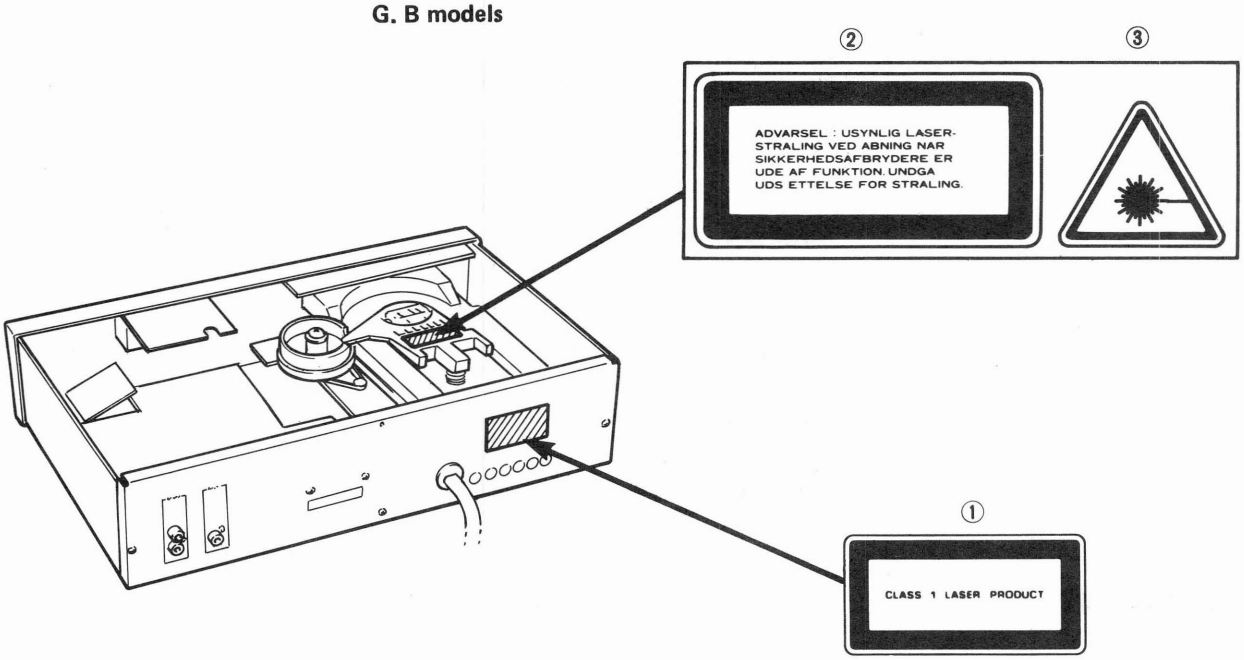

English

① THIS LABEL IS ATTACHED AT THE PLACE ILLUSTRATED TO INFORM THAT THE APPARATUS CONTAINS A LASER COMPONENT.

② THIS LABEL IS ATTACHED IN THE POSITION SHOWN IN THE ILLUSTRATION TO WARN THAT ANY FURTHER PROCEDURE WILL BRING THE USER INTO EXPOSURE WITH THE LASER BEAM.

③ THE WARNING LABEL INFORMING OF RADIATION IS PLACED INSIDE THE UNIT AS SHOWN IN THE ILLUSTRATION, TO WARN AGAINST FURTHER MEASURES ON THE UNIT. THE EQUIPMENT CONTAINS A LASER COMPONENT RADIATING LASER RAYS EXCEEDING THE LIMIT OF LASER PRODUCTS OF CLASS 1.

CAUTION—USE OF CONTROLS, ADJUSTMENTS OR PERFORMANCE OF PROCEDURES OTHER THAN THOSE SPECIFIED HEREIN, MAY RESULT IN HAZARDOUS RADIATION EXPOSURE.

Swedish

① PÅSKRIFTEN SITTER PÅ APPARATEM SOM VISAS SOM EN UPPMANING OM ATT APPARATEN OMFATTAR EN INBYGGD LASERKOMPONENT.

② TEXTSKYLTEN FÖR LASERN ÄR PLACERAD PÅ APPARATEN SOM EN UPPMANING OM ATT APPARATEN INNEHÅLLER EN LASERKOMPONENT.

③ VARNINGSSKYLTEN FÖR STRÅLNING HAR PLACERATS I APPARATEN, SOM BILDEN VISAR, SOM EN VARNING OM YTTERLIGARE INGREPP I APPARATEN. MATERIELEN INNEHÄLLER EN LASERKOMPONENT SOM AVGER LASER-STRÅLNING ÖVERSTIGANDE GRÄNSEN FÖR LASERKLASS 1.

VARNING—INGREPP I APPARATEN BÖR ENDAST FÖRETAS AV FACKMAN MED KUNSKAP OM ATT RISK FÖRELIGGER FÖR RADIOAKTIV ATRÅLNING.

Danish

① DETTE MÆRKAT ER ANBRAGT SOM VIST I ILLUSTRATIONEN FOR AT ADVARE BRUGEREN OM AT APPARATET INDEHOLDER EN LASERKOMPONENT.

② DETTE MÆRKAT OM LASEREN ER ANBRAGT PÅ APPARATET SOM EN OPLYSNING OM AT APPARATET INDEHOLDER ET LASERKOMPONENT.

③ ADVARSELSKILTET OM STRÅLING ER PLACERET INDENI APPARATET, SOM VIST I ILLUSTRATIONEN, SOM EN ADVARSEL OM YDERLIGERE INDGREB I APPARATET. APPARATET INDEHOLDER ET LASERKOMPONENT SOM AVGIVER LASESTRÅLING DER OVERSTIGER GÆNSEVERDIEN FOR LASERKLASSE 1.

ADVARSEL! INDGREB BØR KUN FORETAGES AF EN FAGMAND DA DER ER RISIKO FOR RADIOAKTIV STRÅLING.

Finnish

③ "VAROITUS! LAITE SISÄLTÄÄ LASERDIODIN, JOKA LÄHETTÄÄ (NÄKYMÄTÖNTÄ) SILMILLE VAARALLISTA LASERSÄTEILYÄ:"

INTERLOCK OPERATION

The Digital Compact Disc Player reads the disc signals by laser beam detection. It must be avoided for the human body to be directly exposed to the laser beam. Human eyes are especially badly affected by the laser beam. This unit is therefore equipped with an interlock to prevent unnecessary laser output.

Laser output is controlled by the injection or cutoff of the constant voltage source to the laser diode at Pin 14 (LS) of IC113 (M50747), and also by Automatic Laser Power Control Circuit. When Pin 14 is in "H" (High) level, the laser emits the beam. When Pin 14 is in "L" (Low) level, the laser does not emit the beam.
Pin 14 is set in "H" level when the unit is loaded with the disc and it reads the index signals or when the unit is set in the play mode after that. When the unit reads the index signals and the following two conditions are met, the laser emits the beam.

1) When the Loading Limit Switch is set in "CL" side. (The disc tray is closed.)
2) The pickup is located at the area of minimum internal circumference.

After the above conditions are met and the index signals have been read, the laser emits the beam when the following two conditions are met.

1) whent the PLAY key (SW407) or that of Remote Control Transmitter is pressed.
2) when the PLAY display is ON.

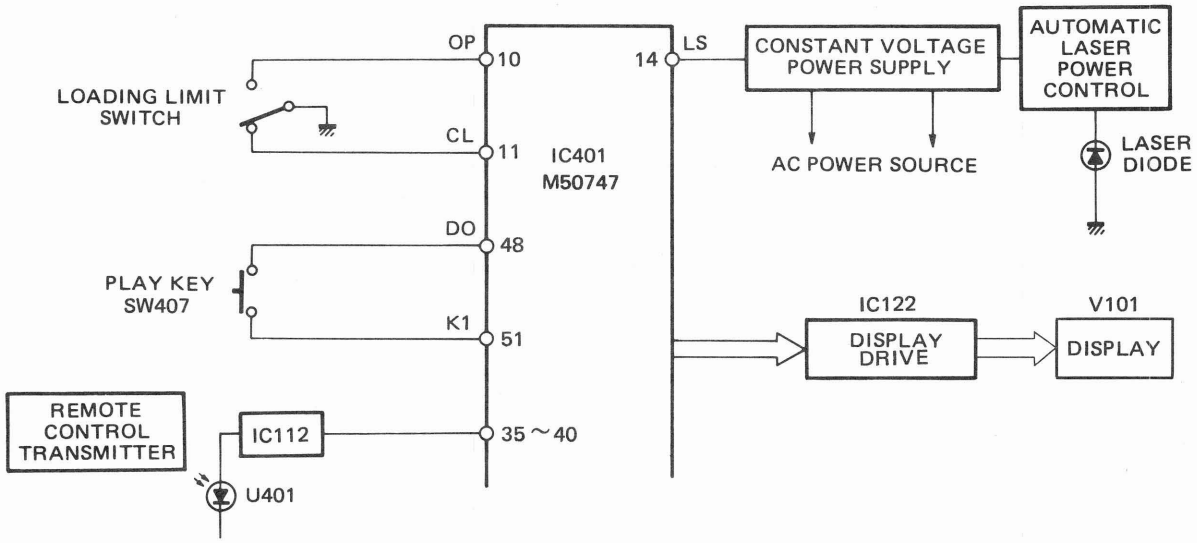

PANELS & REMOTE CONTROL TRANSMITTER

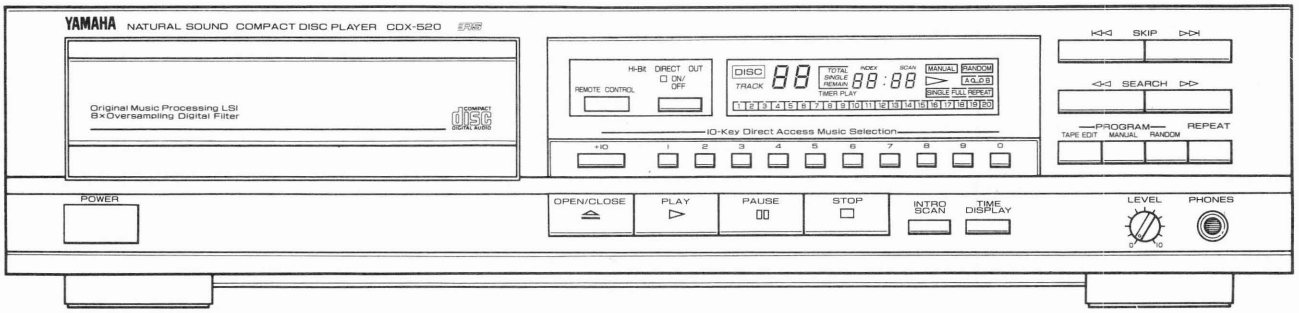

General and PX models only

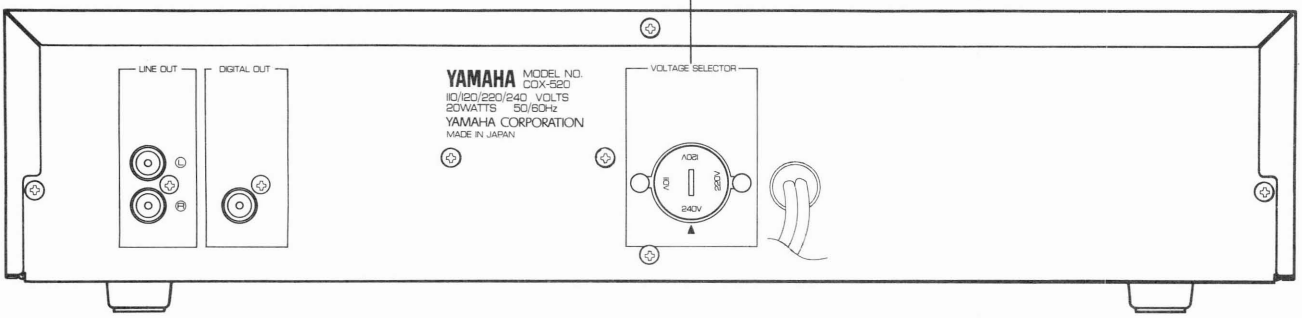

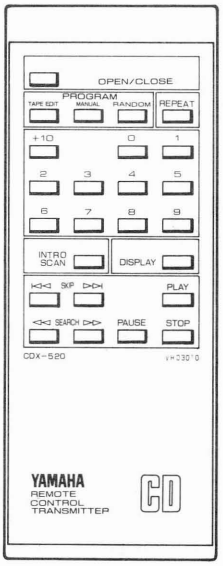

SPECIFICATIONS

AUDIO SECTION

Frequency Response	5Hz ~ 20kHz ± 0.5dB
De-Emphasis Equalization	± 0.5dB (EIAJ)
Harmonic Distortion + Noise	Less than 0.005%, 1kHz (EIAJ)
S/N Ratio	106dB (EIAJ)
Dynamic Range	More than 96dB (EIAJ)
Wow & Flutter	Unmeasurable
Channel Separation	More than 90dB, 1kHz (EIAJ)
Output Voltage	2V (EIAJ)
Output Impedance	2.2kΩ
Headphone Output (−20dB)	620mV/150Ω

INTERNAL SYSTEMS

Optical Pick-up	3-beam laser
Error Correction System	CIRC
D/A Conversion	High-speed 18-bit (L, R twin)
Filter	Hi-Bit 8-Fold Oversampling Digital filter 3rd Order New Active Filter

GENERAL

Power Requirements	
U, C models	120V AC, 60Hz
G, B models	220–240V AC, 50Hz
A model	240V AC, 50Hz
R, P models	110–120/220–240V AC, 50/60Hz
Power Consumption	20W
Dimensions (W x H x D)	435 x 101 x 296.8 (17-1/8" x 4" x 11-11/16")
Weight	4.5kg (9 lbs 14 oz.)
Accessories	Pin plug cord Remote control transmitter Dry-cell: X2 (Size "AAA", R03)

** Specification subject to change without notice.*

U ..... U. S. A. model
C ..... Canadian model
B ..... British model
A ..... Australian model
G ..... European model
R ..... General model
P ..... PX model

DIMENSION

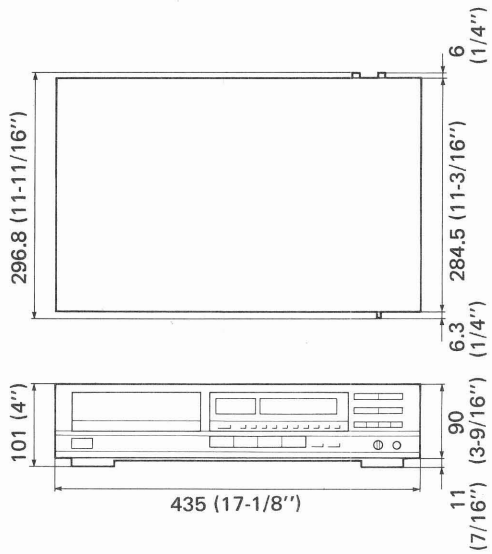

Unit : mm (inch)

INTERNAL VIEW

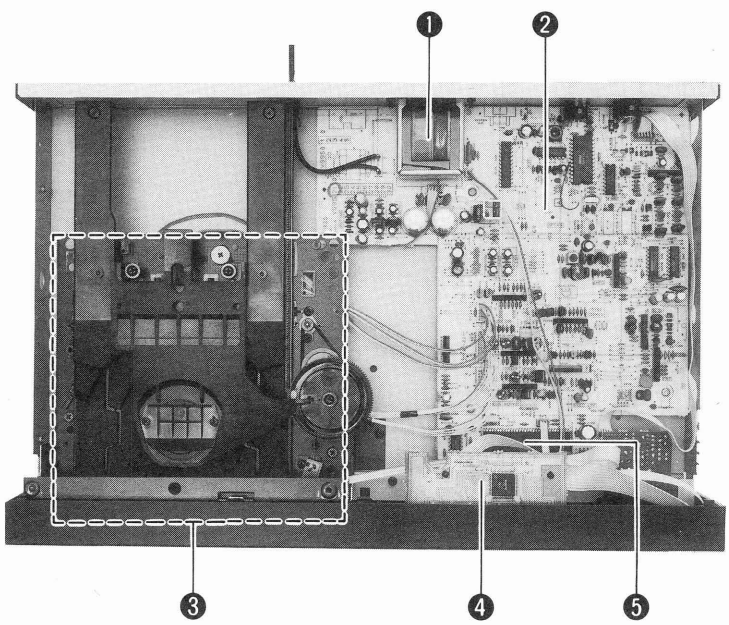

❶ POWER TRANSFORMER
❷ MAIN CIRCUIT BOARD (1)
❸ DISC MECHANISM UNIT (DM-720B)
❹ MAIN CIRCUIT BOARD (2)
❺ μ-COM IC (IC113)

BLOCK DIAGRAM

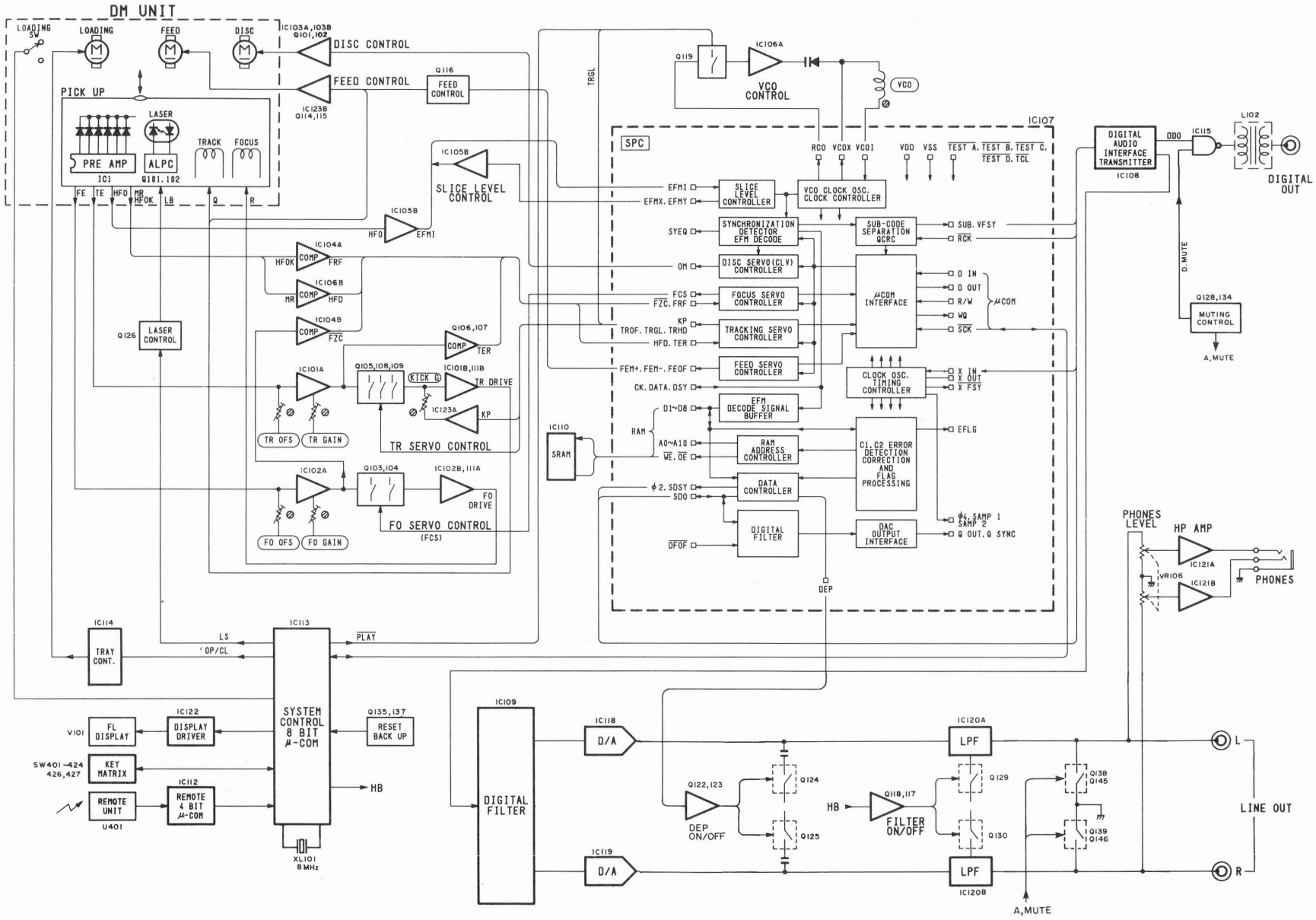

CDX-520/CD-1050

DISASSEMBLY PROCEDURES

(Remove parts in disassembly order as numbered.)

1. Removal of Top Cover

a. Remove 5 screws (①) in Fig. 1.

b. Lift the Top Cover to the back side and move it rearward slantingly.

2. Removal of Front Panel

a. Remove 3 screws (②) in Fig. 1, and pull the Front Panel forward.

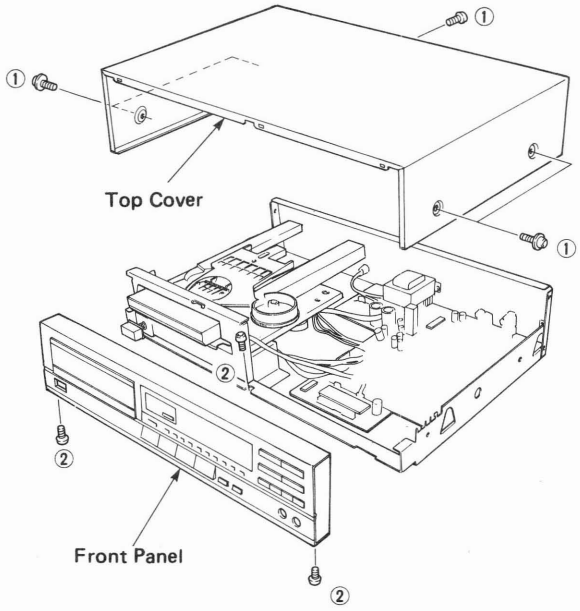

Fig. 1

3. Removal of Disc Tray Ass'y

a. Pull out the Disc Tray Ass'y by turning the loading cam and remove it by pressing the hook.

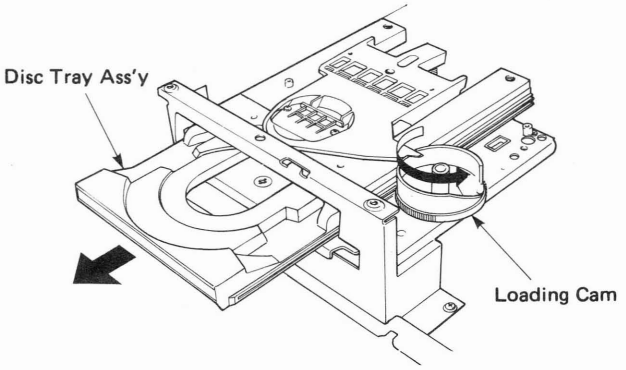

Fig. 2

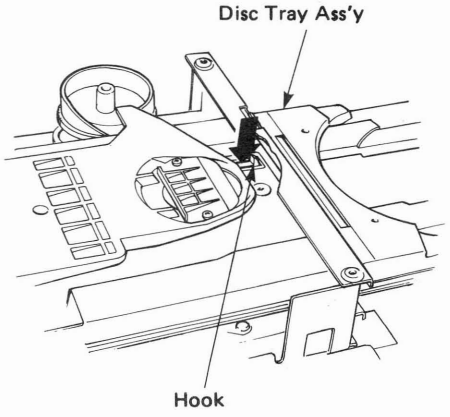

Fig. 3

4. Removal of Disc Mechanism Unit

a. Remove 4 screws (③) in Fig. 4.

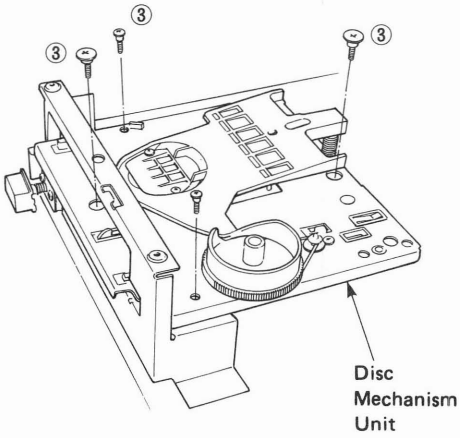

Fig. 4

5. Removal of Disc Motor

a. Remove 2 screws (④) fixing Flapper in Fig. 5 and then remove the flapper.

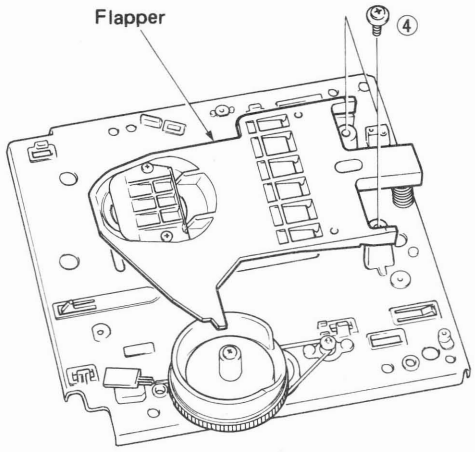

Fig. 5

b. Pull off the disc table and remove 2 screws (⑤) in Fig. 6.

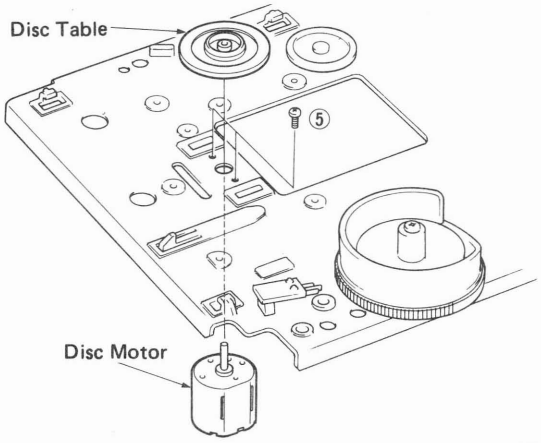

Fig. 6

● **Installation of disc table**

※ The following tools are necessary for installation.

Height adjustment gauge (TX913130)

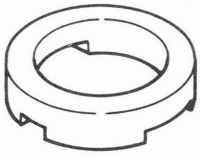

Disc table installer (TX913140)

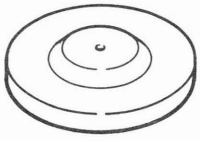

a. Install the height adjustment gauge as shown in Fig.7.

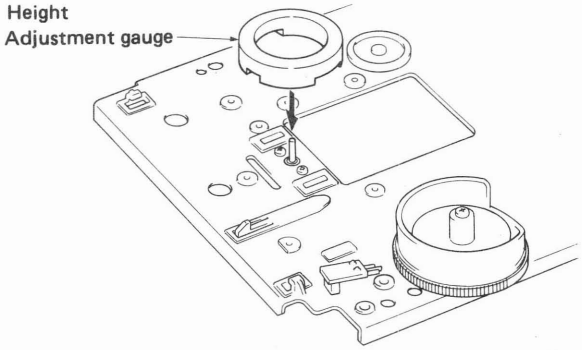

Fig. 7

b. Carefully apply a small amount of anaerobic glue to motor shaft (Loc-Tite # 638).
c. Install turntable onto motor shaft with disc table installer as shown in Fig. 8.
d. Clean excess glue from top of turntable.
e. Allow 5 minites for glue to cure before removing disc table installer and height gauge.

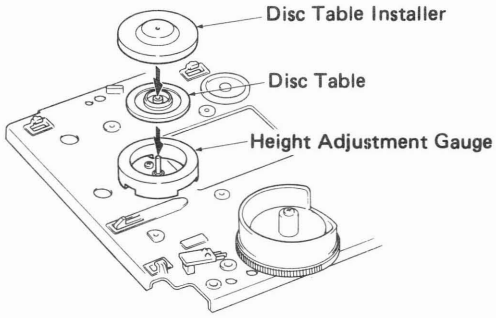

Fig. 8

f. Check that the disc table height is as specified below.

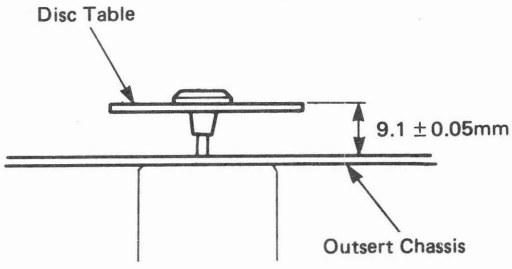

Fig. 9

■ ADJUSTMENTS

• Necessary items

Measuring instruments

Oscilloscope : x 2
(At least one shall have a bandwidth of 50 MHz or more)
Audio frequency oscillator (A.F. OSC) : x 1
Laser power meter : x 1
(LEADER LPM-8000 (P/N TX915140) or equivalent)
AC voltmeter (ACVM) : x 2
(One dual channel or two single channel meters)
DC voltmeter (DCVM) : x 1
Frequency counter (FC) : x 1

Jigs

Test disc : x 1
(YEDS-18 P/N TX911730 or
YEDS-7 P/N TX911320)
Filter (See Fig. A) : x 1
Shorting cord : x 1

Tools

Screwdriver : x 1
(For-Pre-Set Potentiometer adjustment)
Core screwdriver : x 1

• Adjustment jig (with internal filter)

Connect the filter in Fig. A before measurement.

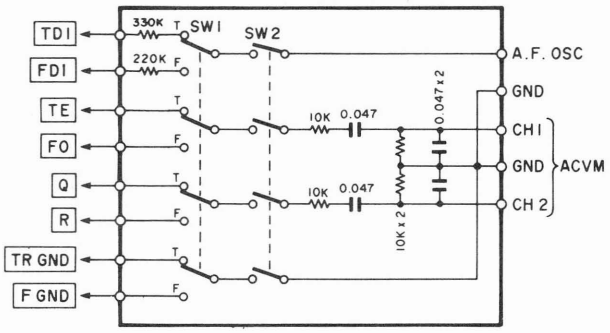

Fig. A

SW1 : FOCUS gain and TRACKING gain switching
SW2 : Filter ON/OFF switch

• Precautions or Special Notes

1. Measure the output level at the output terminal of the AF oscillator.
2. When disc tray has been removed from the mechanism, make sure the position of the loading cam and the leaf switch are correct.
3. The unit should always be in a horizontal position while performing adjustments.

- Test Points

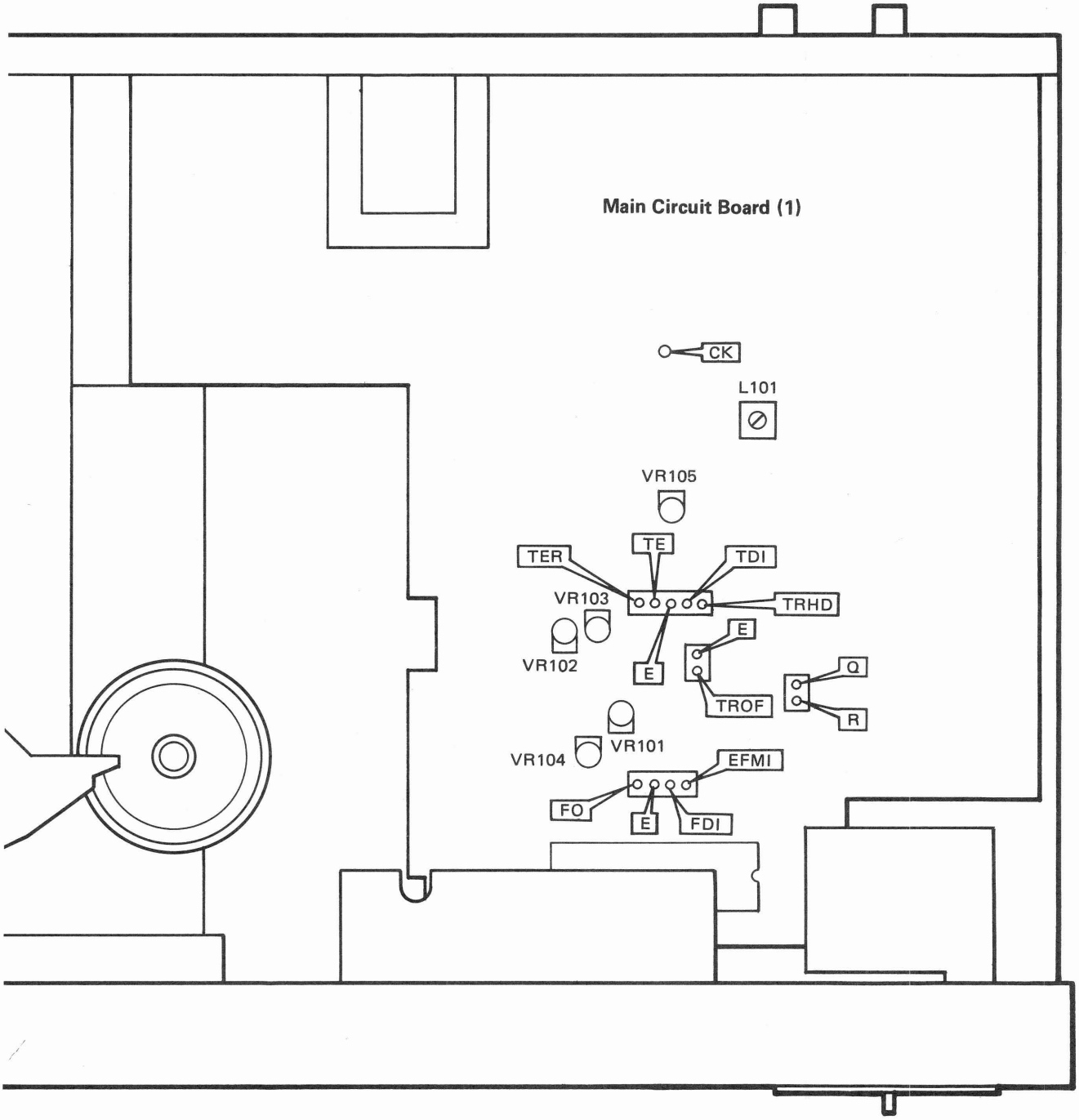

★ **Carry out following adjustments in order as numbered.**

Step 1. Confirmation of Laser Output.
Step 2. Confirmation of Focus Actuator Operation.
Step 3. Adjustment of VCO.
Step 4. Adjustment of Tracking Gain
Step 5. Adjustment of Focus Gain
Step 6. Adjustment of Tracking Offset
Step 7. Adjustment of Focus Offset
Step 8. Adjustment of Kick Gain
Step 9. Confirmation of Jitter
Step 10. Confirmation of Skip Search Operation

Confirmation of Laser Output (Step 1)

① Do not load the disc.
② Remove the disc tray.
③ Remove the flapper.
④ Apply the laser power meter's sensor to the pick-up head as shown in Fig. B.
⑤ Press POWER key. (POWER ON)
⑥ Measure the laser output during the 5 seconds of FOCUS search mode.

Rating: Laser output = 0.1mW to 0.5mW

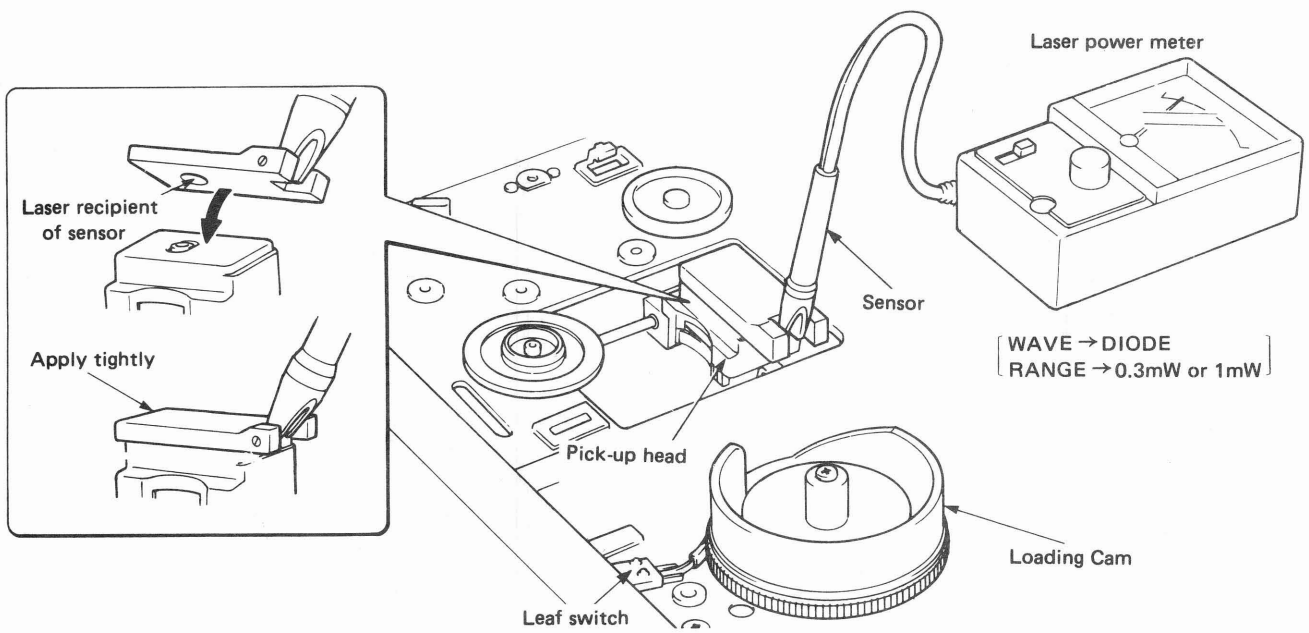

Fig. B

Precautions in handling pick-up head

(1) No soldering necessary for the unit.
(2) Since laser light is near-infrared, visual confirmation is difficult. While light is emitted, for safety make sure your eyes are at least 30 cm (12 inches) away from the objective lens.
(3) Do not disassemble it.
(4) Do not drop or apply shock to it.
(5) Do not leave it under high temperature or humidity.
(6) Do not touch the objective lens. Should there be dirt on the lens, clean using a blower for cameras.

Confirmation of Focus Actuator Operation (Step 2)

Oscilloscope (1) setting

- DC coupling
- 1V/div range (Verticla)
  (0.1/div when 10:1 probe is used)
- 0.5 sec/div or 1 msec/div time (Horizontal)

① Do not load a disc.
② Connect the oscillocope (1) to R and GND terminals.
③ Press POWER key. (POWER ON)
④ After confirming that loading cam position is correct press OPEN/CLOSE key for CLOSE operation.
⑤ During 5 seconds of FOCUS search, confirm that the waveform is as shown in Fig. C.
⑥ Confirm that the pick-up head's objective lens moves smoothly between the lowest and highest points.

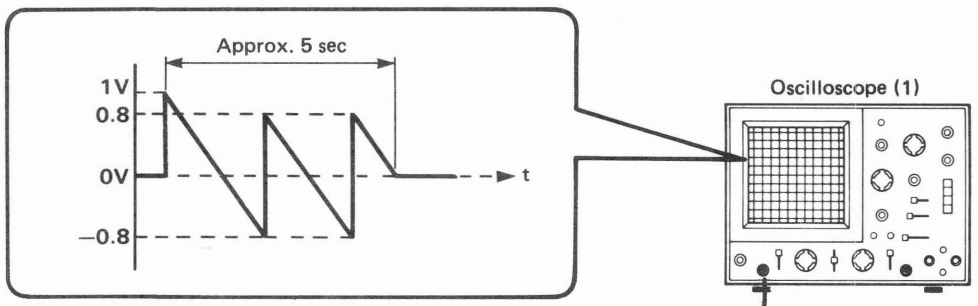

Fig. C

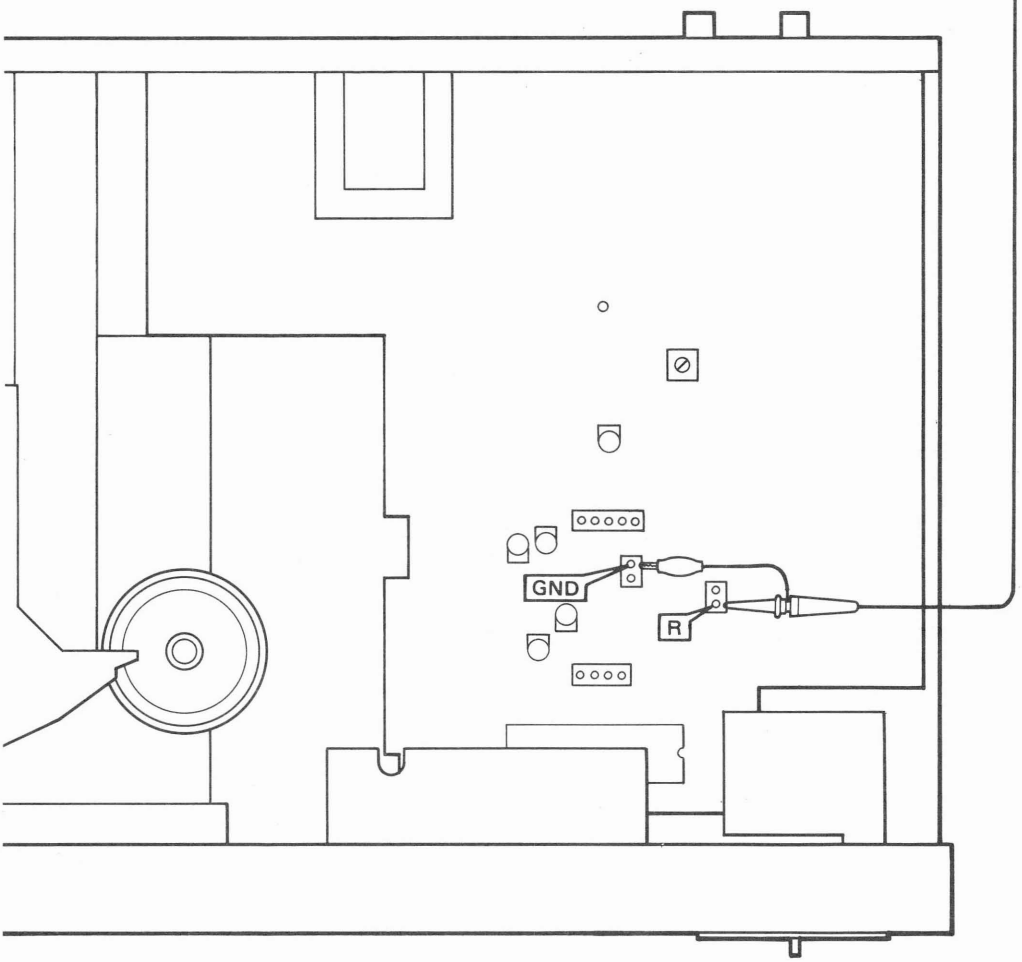

Adjustment of VCO (Step 3)

① Connect the shorting cord and measuring instruments, as shwon in Fig. D.
② Do not load a disc.
③ Press POWER key. (POWER ON)
④ While observing the frequency counter indication (F_{VCO}), adjust L101 so that it satisfies the rating.

Rating: F_{VCO} = 4.3218 MHz ± 10 kHz

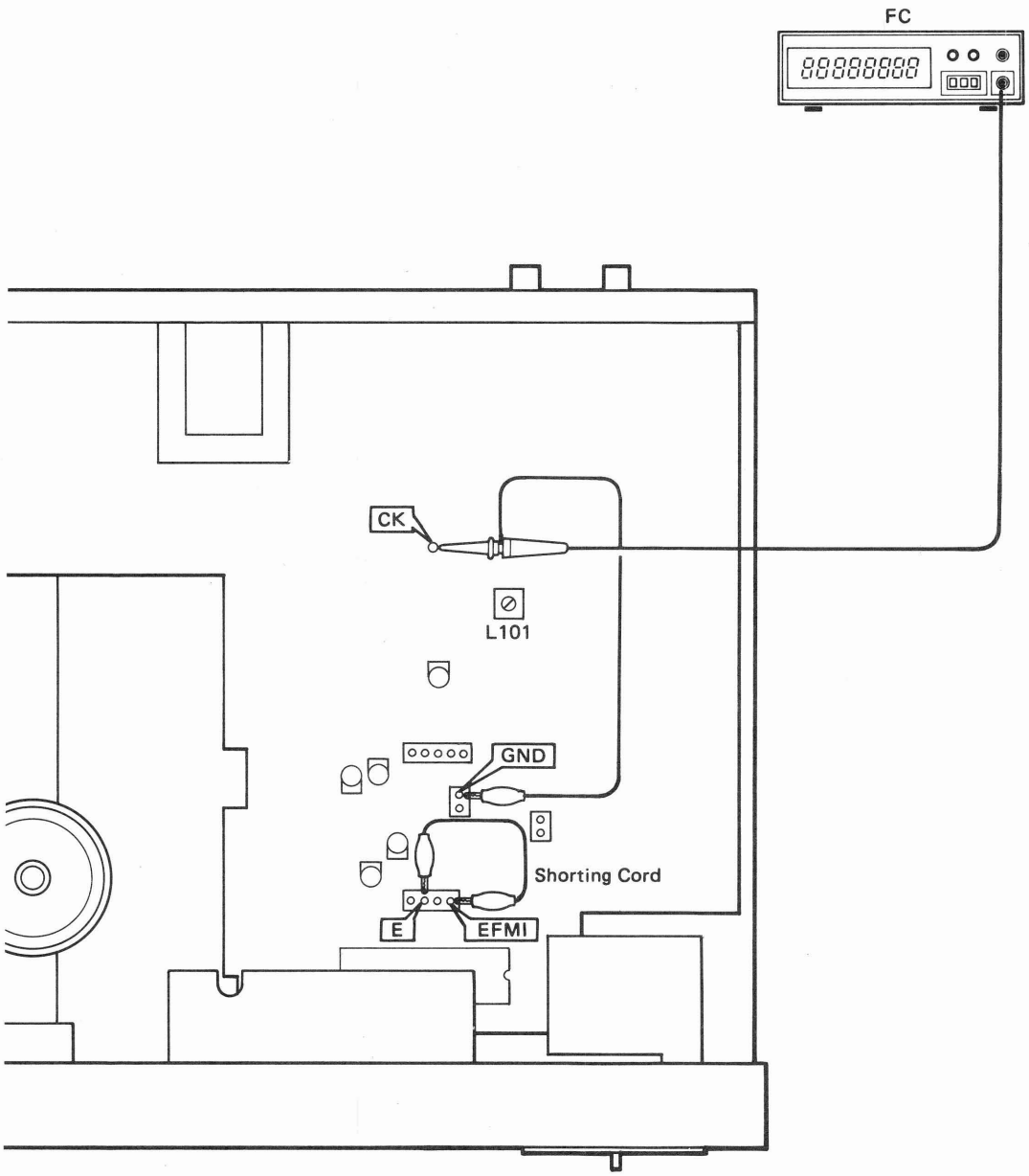

Fig. D

Adjutment of Tracking Gain (Step 4)

* This adjustment requires two single channel AC voltmeters or one dual channel AC voltmeter.

① Connect the filter and measuring instruments, as shown in Fig. E.
Apply a 800 Hz, 100 mVrms signal from the AF oscillator to TDI terminal via the resistor (330 kiloohms) in the filter.
② Set SW2 to OFF.
③ Set SW1 to T (TRACKING).
④ Press POWER key. (POWER ON)
⑤ Load the test disc.
⑥ Press PLAY key.
⑦ Set SW2 to ON.
⑧ While observing the indications of the AC voltmeters (CH1: E_{TE}, CH2: E_Q), adjust VR103 (TRACKING GAIN) so that they satisfy the rating.

Rating: $E_{TE} - E_Q = 17dB$

Example	[0dBV = 1V]
E_Q = −30dBV (30mV)	
E_{TE} = −13V (223mV)	

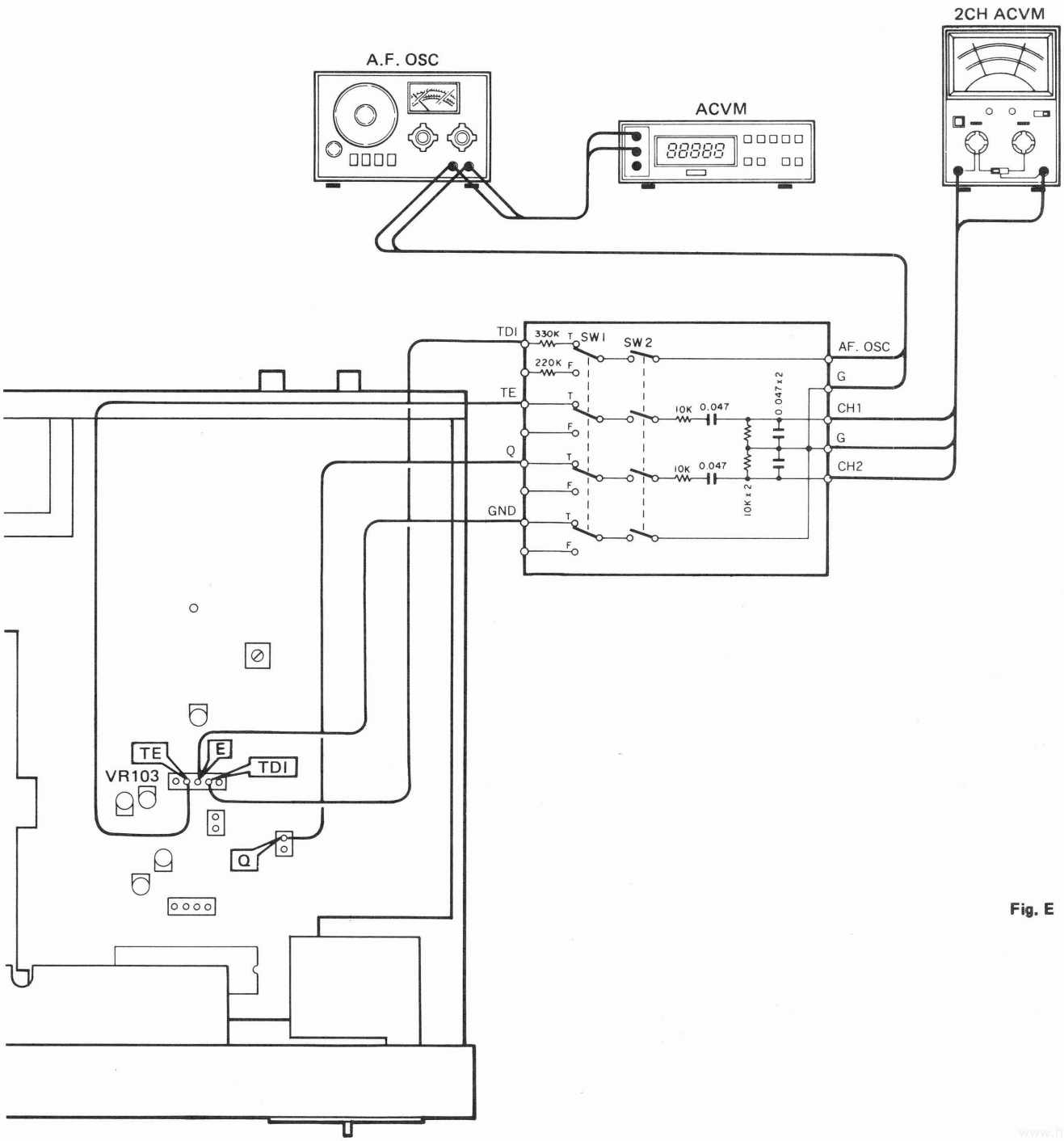

Fig. E

Adjustment of Focus Gain (Step 5)

* This adjustment requires two single channel voltmeter or one dual channel AC voltmeter.

① Connect the filter and measuring instruments, as shown in Fig. F.
Apply an 800 Hz, 4.5 Vrms signal from the AF oscillator to FDI terminal via the resistor (220 kiloohms) in the filter.
② Set SW2 to OFF.
③ Set SW1 to F (FOCUS).
④ Press POWER key. (POWER ON)
⑤ Load the test disc.
⑥ Press PLAY Key.
⑦ Set SW2 to ON.
⑧ Read the indications of the AC voltmeters (CH1: E_{FO}, CH2: E_R), adjust VR104 (FOCUS GAIN) so that they satisfy the rating.

Rating: $E_{FO} - E_R = -8dB$

Example	[0dBV = 1V]
E_{FO} =	−24dBV (63mV)
E_R =	−16dBV (160mV)

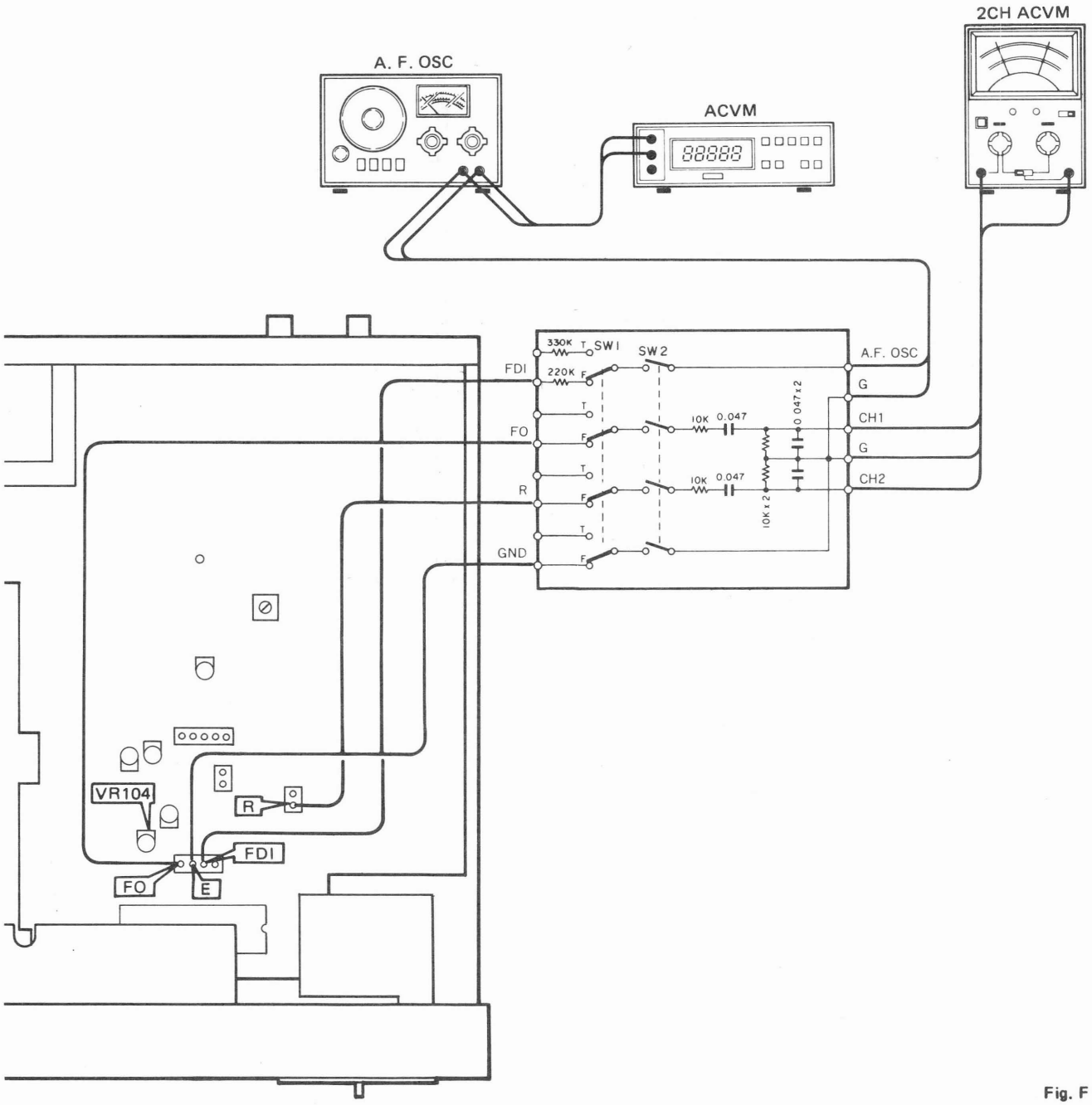

Fig. F

Adjustment of Kick Gain (Step 8)

Oscilloscope (1) (2-ch oscilloscope) Settings

- DC coupling
- CH1 → TER terminal: 0.1V/div (Vertical) (10 mV/div when 10 : 1 probe is used)
- CH2 → TRHD terminal: 5V/div (Vertical) (0.5V/div when 10 : 1 probe is used)
- TRIGGER MODE: 2 CH
- 0.2msec/div time (Horizontal)

① Connect the measuring instruments, as shown in Fig. H.
② Press POWER key. (POWER ON)
③ Load the test disc.
④ Press PLAY key.
⑤ Observe waveform while pressing Fast Forward mode key (▶▶) for 3 seconds.
⑥ Adjust VR105 (KICK GAIN) so that the TER signal cycle is $1.0^{-0}_{+0.5}$ when TRHD signal level is High.
* Adjust at the inner circumference of the disc.
⑦ Press Reverse mode key (◀◀) for 3 seconds and confirm that TER signal cycle is within the above specification but in reverse phase.

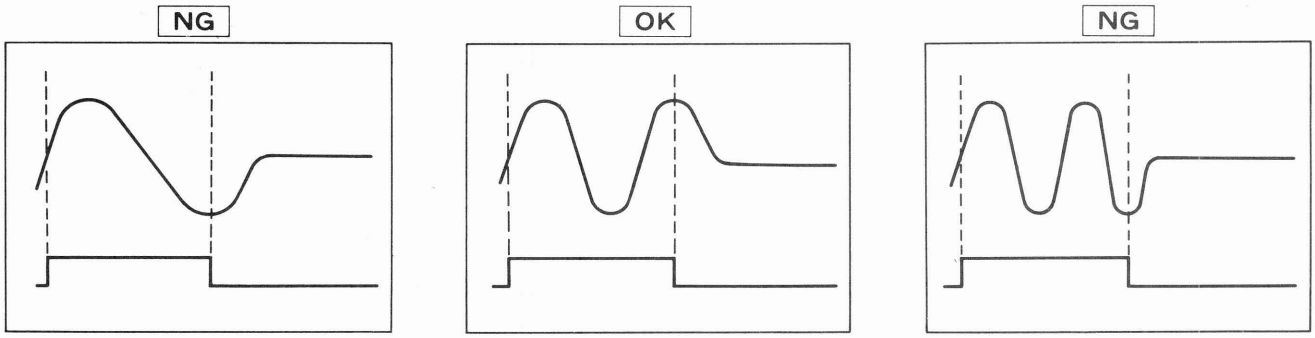

This shows about 0.75 cycle which is incorrect

This shows about 1.25 cycle which is within specification.

This shows about 1.75 cycle which is incorrect

* The TER waveform after the TRHD rise should converge gently.

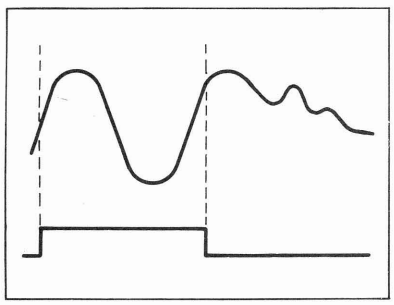

Not converging gently

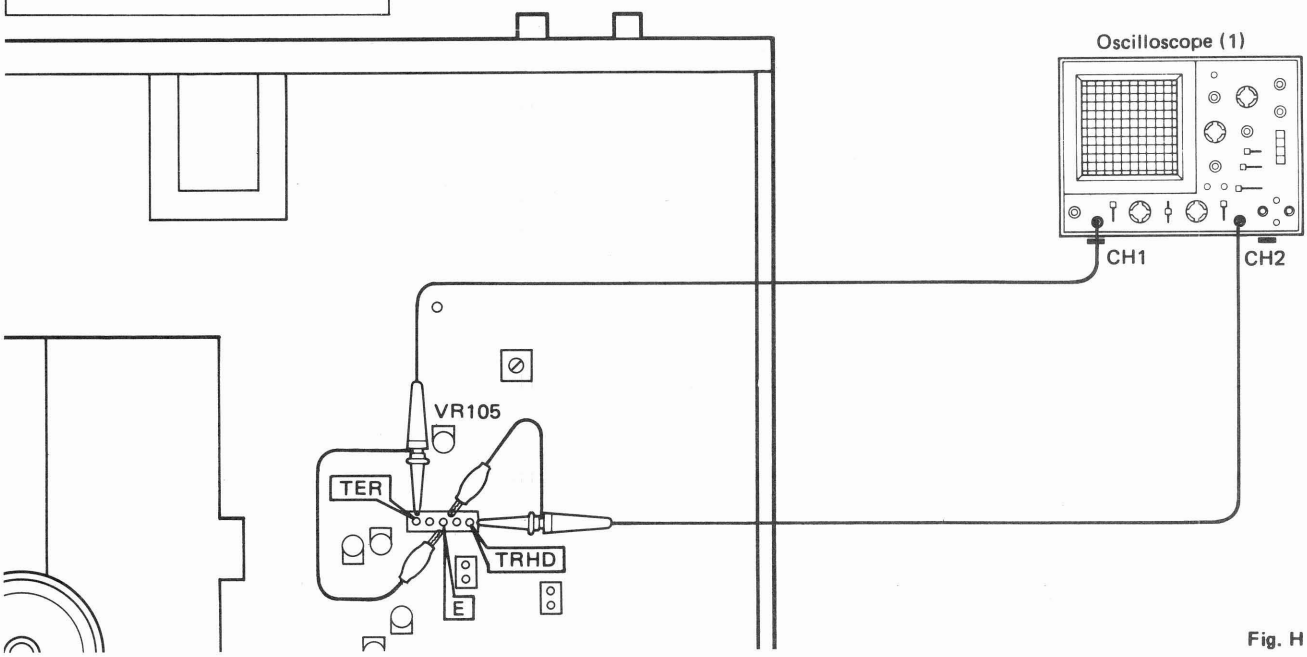

Fig. H

Confirmation of Jitter (Step 9)

Oscilloscope (2) Settings

- AC coupling
- 0.4 V/div range (Vertical)
  (40 mV/div when 10 : 1 probe is used)
- 0.2 ~ 0.5 μsec/div time (Horizontal)

① Connect oscilloscope (2) to EFMI terminal, as shown in Fig. F.
② Press POWER key. (POWER ON)
③ Load the specified disc (YEDS-18 or Philips test disc).
④ Press PLAY key.
⑤ Confirm that the EFMI signal (eye-pattern) waveform is distinct and clear.
* Confirm at the center of the disc.

Oscilloscope (2)

Eye pattern

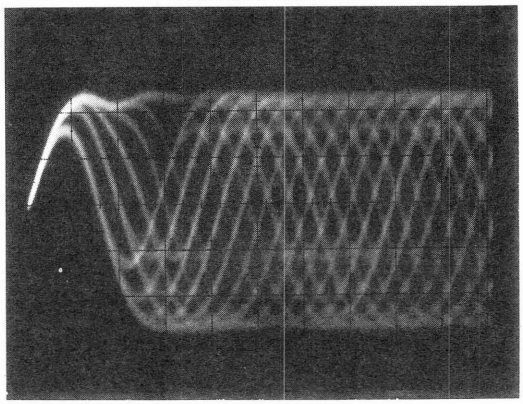

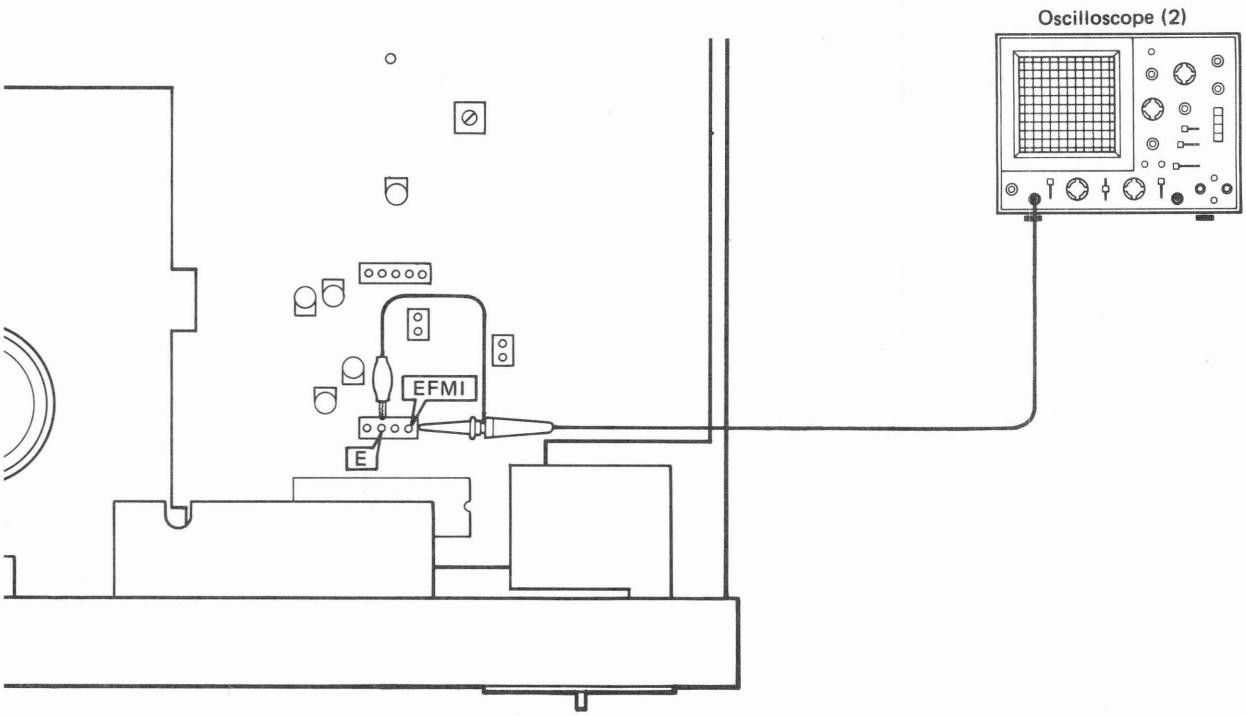

Fig. I

Waveforms 3T – 11T.

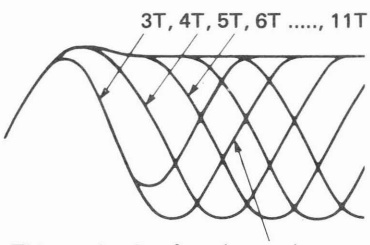

This portion is referred to as the eye pattern.

The abnormal eye pattern has less distinct lines and smaller amplitude than that of the good waveform.

Good waveform

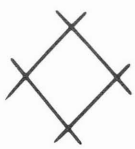

Abnormal waveform

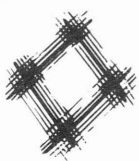

Confirmation of Skip Search Operation (Step 10)

① Load the disc.
② Press the PLAY key.
③ Press the skip key (⏭) or 10 key to start searching.
④ Confirm that the skip is searched properly.

IC DATA

IC113: M50747-731SP
8 bit μ-COM

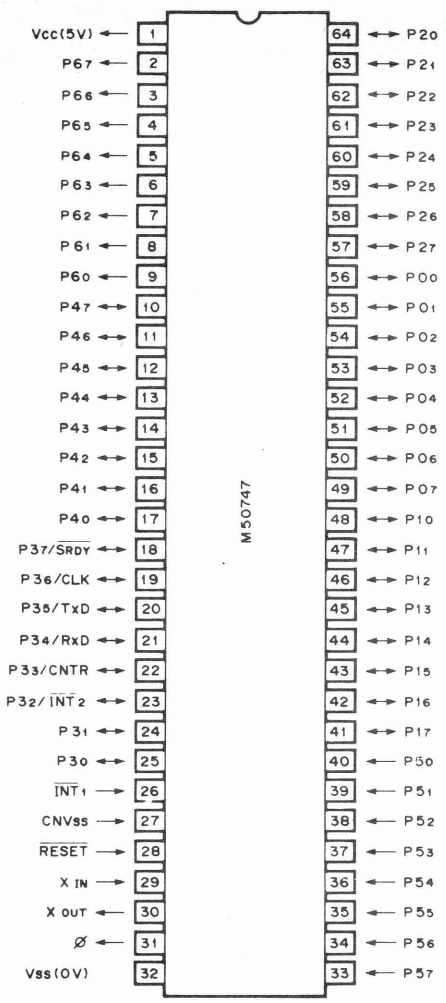

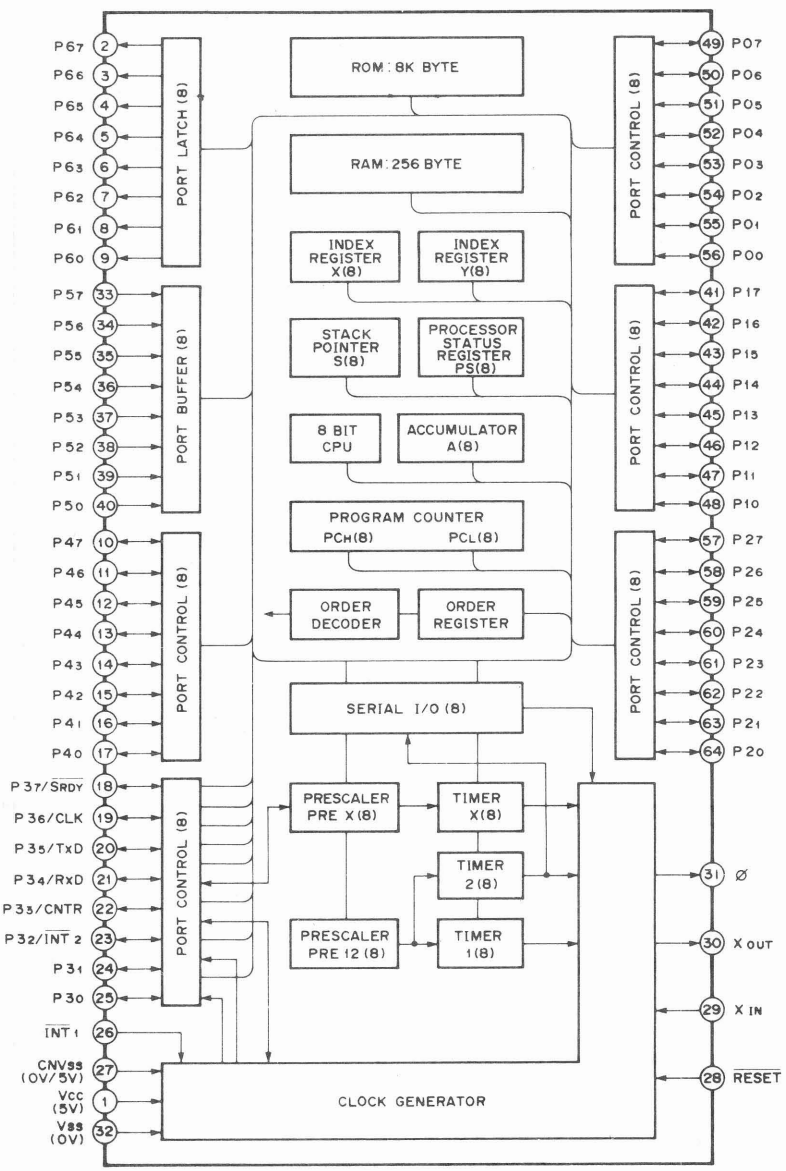

Pin No.	Pin Name	Description	I/O	Active	Function
1	Vcc				5V
2	P67				N. C.
3	P66				
4	P65				
5	P64				
6	P63				
7	P62				
8	P61				
9	P60				
10	P47	OP. SW	I	L	END Switch (OPEN/CLOSE)
11	P46	CL. SW	I	L	
12	P45	OPEN	O	H	LOADING MOTOR drive OPEN
13	P44	CLOSE	O	H	CLOSE
14	P43	$\overline{\text{LASER}}$	O	H	Laser switch
15	P42	REMRES	O	H	Remote control reset
16	P41	$\overline{\text{PLAY}}$	O	H	PLAY signal DIT
17	P40	PLAY	O	H	VCO
18	P37/$\overline{\text{SRDY}}$				N. C.
19	P36/CLK	CLK	I/O		SPC Interface
20	P35/TXD	SO	O		
21	P34/RXD	SI	I		
22	P33/CNTR	R/W	O		
23	P32/$\overline{\text{INT2}}$	AO			N. C.
24	P30	WQ	I		SPC Interface
25	P31	CLK	O		
26	$\overline{\text{INT1}}$	$\overline{\text{INT}}$			5V
27	CNVSS	CNVSS			GND
28	$\overline{\text{RESET}}$	RESET	I		Reset
29	XIN	XIN	I		8 MHz Clock
30	XOUT	XO	O		
31	ϕ	ϕ2	O		Timing output
32	VSS	VSS			GND
33	P57	PDET			
34	P56				GND
35	P55	RM5	I		Remote control interface
36	P54	RM4	I		
37	P53	RM3	I		
38	P52	RM2	I		
39	P51	RM1	I		
40	P50	RM0	I		
41	P17	D7			N. C.
42	P16	D6	O		Digit line
43	P15	D5	O		
44	P14	D4	O		
45	P13	D3	O		
46	P12	D2	O		
47	P11	D1	O		
48	P10	D0	O		
49	P07	K3	I		Key input line
50	P06	K2	I		
51	P05	K1	I		
52	P04	K0	I		
53	P03	DATA	O		LCD Display drive interface
54	P02	CLK	I/O		
55	P01	CE	O		
56	P00	INH	O		
57	P27				N. C.
58	P26	$\overline{\text{FIBIT}}$	I		HI BIT Control
59	P25	HIBIT	O	H	Key input line (HI BIT)
60	P24				DIT VCO switch
61	P23	P, PLAY			GND
62	P22	REPLAY			
63	P21	STOP			
64	P20	PLAY			

IC113 : YM3616
Signal Processor & Controller

YM-3816 is a CMOS LSI for signal processing and servo control of the compact disc player.
It executes such signal processing as demodulation of the EFM signal from the optical pick-up, detection and correction of the erroneous signal and digital filtering which helps to improve the sound quality, as well as such intelligent servo controlling as focus, disc, tracking and feeding.

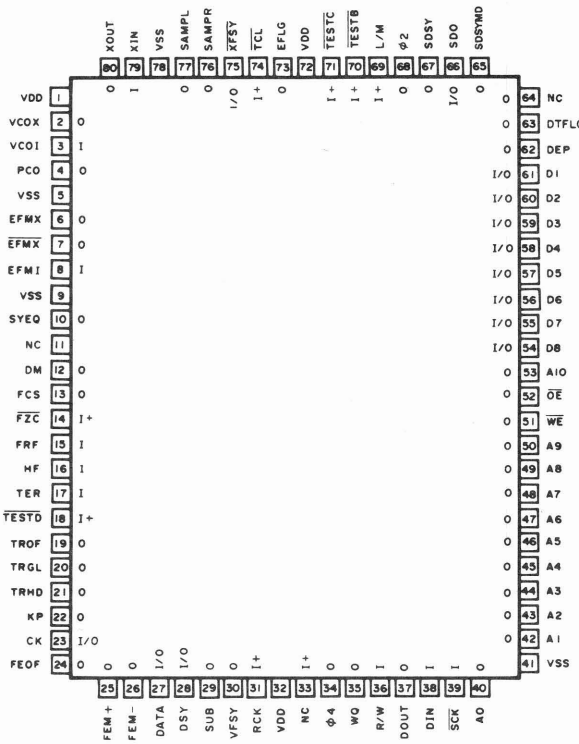

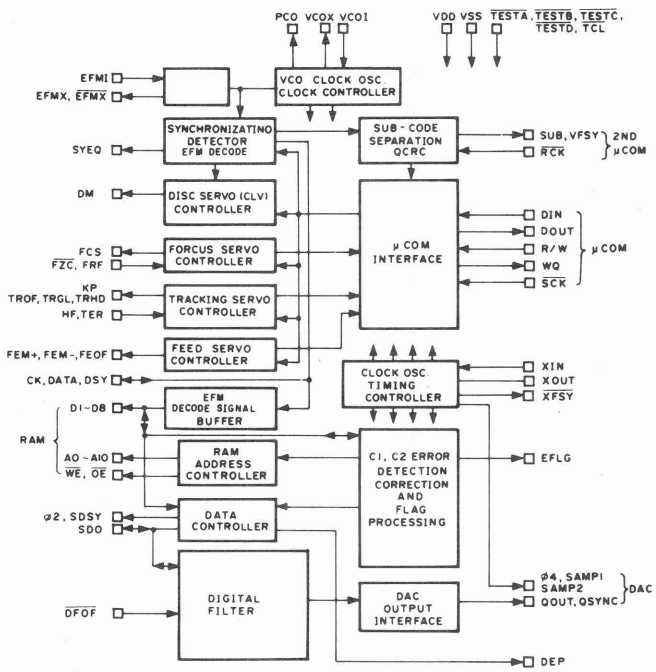

Pin No.	Pin Name	I/O	Function
1	VDD		Power Supply
2	VCOX	O	Clock Playback Circuit 4PCO
3	VCOI	I	
4	PCO	O	
5	VSS		GND
6	EFMX	O	EFM Signal External Circuit
7	$\overline{\text{EFMX}}$	O	
8	EFMI	I	
9	VSS		GND
10	SYEQ	O	Synchronized Uniform Signal
11	N.C.		Not Use
12	DM	O	Disc Servo { LOW (0V): FORWARD OPEN (2.5V): STOP HIGH (5V): REVERSE
13	FCS	O	Focus Servo System Input
14	$\overline{\text{FZC}}$	I	
15	FRF	I	
16	HF	I	Tracking Servo System Input
17	TER	I	
19	TROF	O	
20	TRGL	O	
21	TRHD	O	{ LOW (0V): REW
22	KP	O	OPEN (2.5V): STOP HIGH (5V): FF

Pin No.	Pin Name	I/O	Function
23	CK		EFM Demodulated Signal Check Output (4.3218MHz, clock)
24	FEOF	O	Feed Servo System
25	FEM+	O	
26	FEM–	O	
23	CK	I/O	EFM Demodulated Signal Check Output (4.3218MHz clock)
27	DATA	I/O	
28	DSY	I/O	
29	SUB	O	Sub-code Output
30	VFSY	O	
31	RCK	I	
32	VDD		Power Supply
33	NC	I	Not Use
34	$\phi 4$		4.3218 MHz Clock
35	WQ	O	Q Code Output System — Data Output to μCOM; Data I/O Control Signal; Clock for Data I/O; Data I/O from μCOM — Q code Output μCOM Command
37	DOUT	O	
36	R/W	I	
39	$\overline{SCK}$	I	
38	DIN	I	
41	VSS		GND
40	A0	O	RAM Connections
42	A1	O	
43	A2	O	
44	A3	O	
45	A4	O	
46	A5	O	
47	A6	O	
48	A7	O	
49	A8	O	
50	A9	O	
51	$\overline{WE}$	O	
52	$\overline{OE}$	O	
53	A10	O	
54	D8	I O	
55	D7	I O	
56	D6	I O	
57	D5	I O	
58	D4	I O	
59	D3	I O	
60	D2	I O	
61	D1	I O	
62	DEP	O	Deemphasis Signal
63	DTFLG	O	Data Error Signal — Data Control Circuit Board Serial Signal Output
66	SDO	O	Digital Data Output LSB first/MSB first
67	SDSY	O	
68	$\phi 2$	O	2.1659MHz Clock
69	L/M	I	SB first (H)/MSB first (L) Switch for SDO
71	$\overline{TESTC}$	I	Test Terminal
64	NC	O	Not Use — DAC Interface
65	SDSYMD	O	BB Word Clock for DAC
76	SAMPR	O	Digrich Signal
77	SAMPL	O	
34	$\phi 4$	O	4.3218MHz Clock
18	$\overline{TESTD}$	I	Test Terminal
70	$\overline{TESTB}$	I	
74	$\overline{TCL}$	I	
72	VDD		Power Supply
73	EFLG	O	C1, C2 Error Correction Check Signal
75	$\overline{XFSY}$	I/O	Synchronized Clock Signal
78	VSS		GND
79	XIN	I	Clock Oscillation
80	XOUT	O	

IC109: YM3414
Digital Filter

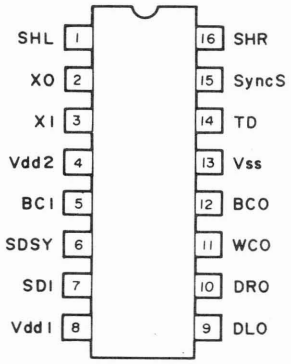

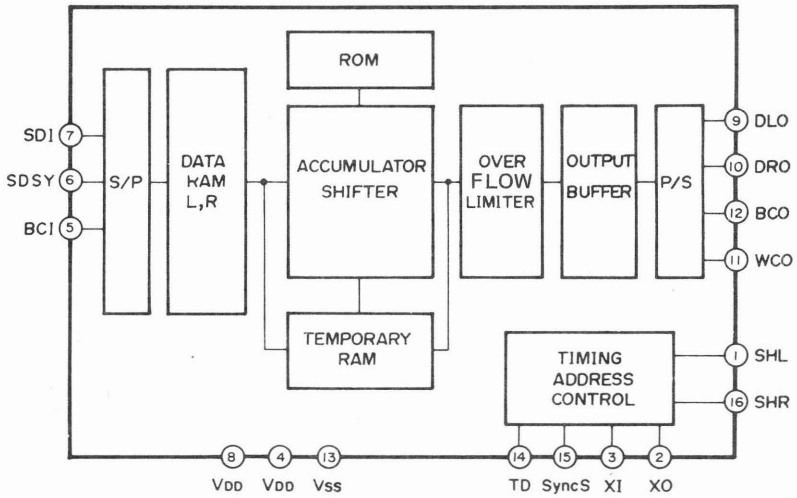

Pin Name	Pin No.	I/O	Description of function
SHL	1	O	At 1DAC (TD = 'L') : Deglitcher signal of Lch (when four-fold) At 2DAC (TD = 'H') : Deglitcher signal of L/Rch (when eight-fold)
X 0 X 1	2 3	O I	Generates quarts oscillation between XI and XO. 16.934MHz (Direct input into XI from the external source is also possible.)
Vdd 2	4		+5V power source for quarts oscillation and deglitcher signal
BCI	5	I	Input terminal for bit clock of input data
SDSY	6	I	Clock to indicate L/Rch distinction of input data and input timing
SDI	7	I	Data input terminal
Vdd 1	8		+5V power source for digital signal system
DLO	9	O	At 1DAC (TD = 'L') : L and R ch data output terminal (when four-fold) At 2DAC (TD = 'H') : L ch data output terminal (when eight-fold)
DRO	10	O	R ch data output terminal
WCO	12	O	Word clock of output data DLO, DRO
BCO	12	O	Bit clock of output data
Vss	13		GND terminal
TD	14	I	1DAC/2DAC select terminal 1DAC (four-fold) = 'L' 2DAC (eight-fold) = 'H'
Sync S	15	I	Synchronous signal to absorb jitter in unsynchronous input (Syncs = 'H' : fully synchrnous input = 'L' : SDSY prohibited)
SHR	16	O	R ch deglitcher signal at 1DAC

IC101 ~ 104, 123: NJM4558S
IC105: NJM2043S
IC106, 120: μPC4570HA
Dual Ope-amp.

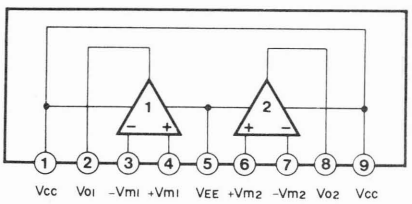

IC111: STA341M
Transistor Array

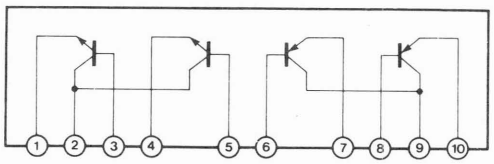

IC108: YM3613B
Digital Audio Interface Transmitter (DIT)

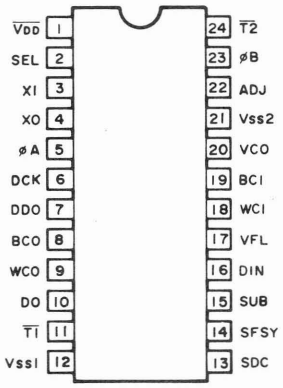

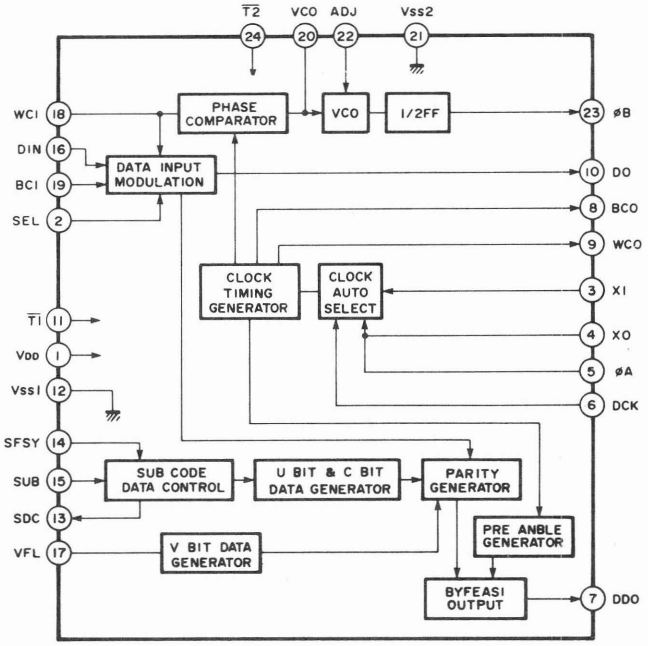

IC122: LC7582
LCD Driver

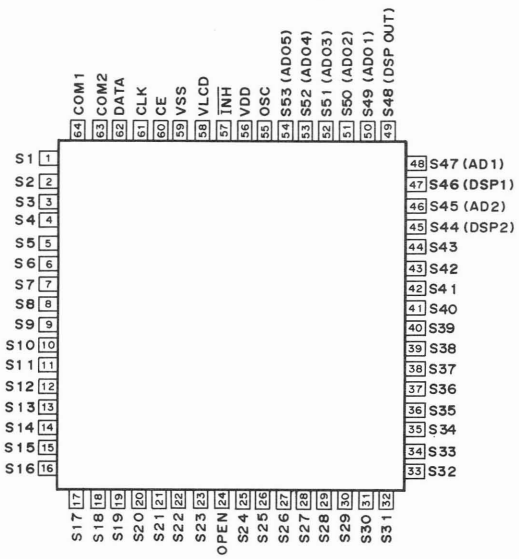

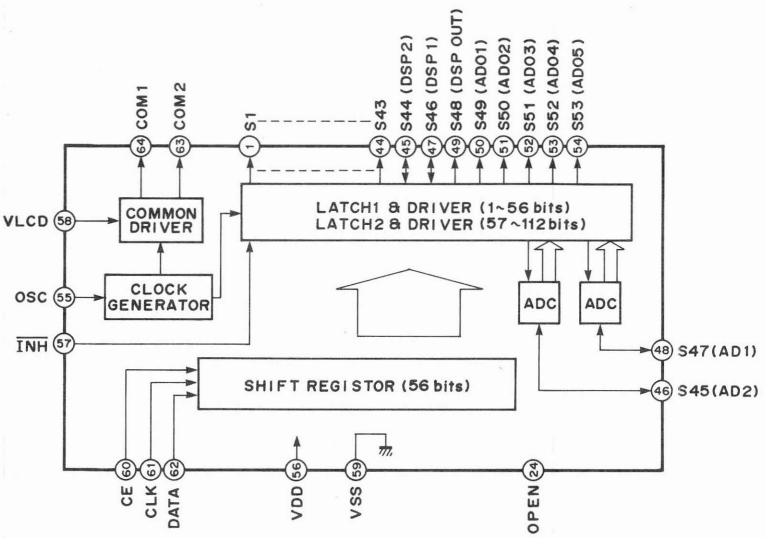

IC114: BA6218
Motor Driver

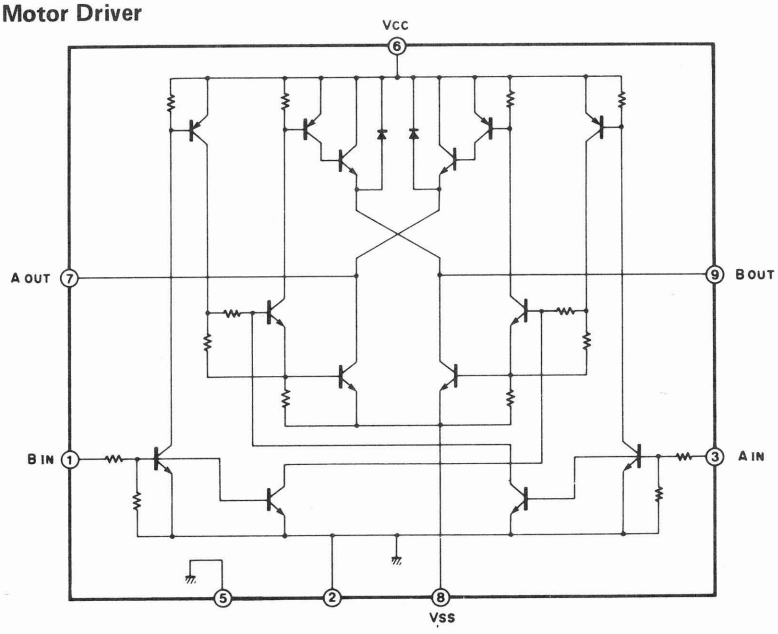

IC115: TC74HC00P
Quad 2-Input NAND Gate

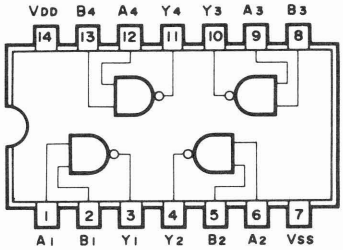

U901: GP1U501X

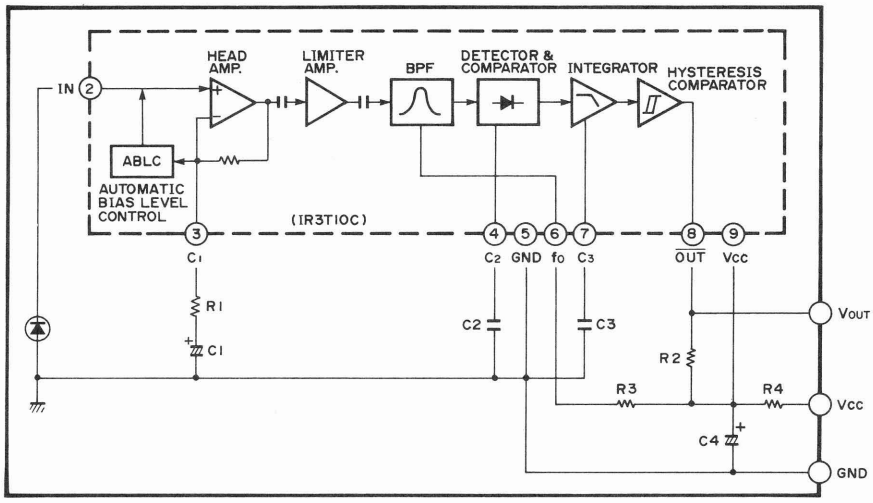

TEST PROGRAM

1. Starting the test program

Turn power on while holding down the [4] and [7] keys.

2. Contents of test program

All elements in the LCD light for the first four seconds after the test program is activated.
(Pressing any key other than [1] – [9] and [0], even during the initial four seconds, will cause the next step to begin immediately.)

a. LCD test

[+10] key
1 – 9 and 0 are displayed, in that order, in each of the six seven-segment display blocks.
DISC, TRACK, time mode brackets, TOTAL, SINGLE, REMAIN, INDEX, : , SCAN, MANUAL, RANDOM, play triangle, tape display, A, B, repeat brackets, SINGLE, FULL and REPEAT light and the go out, in that order.
After the calendar brackets light, the calendar numbers 1 through 20 light in order.
All segments light, then go out.

b. Hi-bit test

The hi-bit switch turns the hi-bit LED on and off.

c. SPC test

Commands can be sent to the SPC by means of key input.

Key commands	SPC commands
[OPEN/CLOSE]	FOCUS START
[PLAY]	PLAY
[PAUSE]	SEARCH (PAUSE)
[STOP]	STOP (INIT)
[SKIP+]	FFF
[SKIP–]	FFB
[SEARCH+]	FF
[SEARCH–]	FB
[REPEAT]	FEED FORWARD
[TAPE]	FEED RETURN
[AUTO]	DISC START
[MANUAL]	DISC BRAKE
[DISPLAY]	TIME INDICATOR SWITCH SINGLE . . . . MIN : SEC TOTAL . . . . AMIN : ASEC

Display description

These commands and the internal state of the SPC can be read from the LCD display.

DISC . . . . . Lights when focusing.
Track indicator . . . Shows the track number (TNO) read in.
Time indicator . . . Shows the time read in (MIN : SEC or AMIN : ASEC).
Play indicator . . . . While focusing, lights at the point at which play commences.
Calendar . . . . . 1 – 8: Displays the SPC internal state.
11 – 18: Displays the transmitted command.

Internal state display

1 NQ . . . . New Q code (lit: new Q code set)
2 FCO . . . Focus out (lit: focus out)
3 MZ . . . . Disc motor stopped (lit: disc motor stopped)
4 4F . . . . Frame error (1/16 second)
5 8F . . . . Frame error (1/8 second)
6 S1 . . . . Search mode
7 S2 . . . . (00: –1/4, 01: 1/4 – 4, 10: 4 – 128, 11: 128 –)
8 SIGN . . . Search polarity (lit: –)

Command display/illuminated numbers (–: not lit)

	11	12	13	14	15	16	17	18
STOP	–	–	–	14	–	–	–	–
FEED FORWARD	–	–	–	–	–	16	–	–
FEED RETURN	–	–	–	–	15	16	–	–
FOCUS START	–	–	–	–	–	–	17	–
DISC START	–	–	–	–	–	16	17	–
DISC BRAKE	–	–	–	–	15	16	17	–
PLAY	–	–	–	–	–	–	–	18
FF	–	–	–	–	–	16	–	18
FB	–	–	–	–	15	16	–	18
FFF	–	–	–	–	–	–	17	18
FFB	–	–	–	–	15	–	17	18
SEARCH (PAUSE)	–	–	–	–	–	16	17	18

INTERCONNECT WIRING DIAGRAM

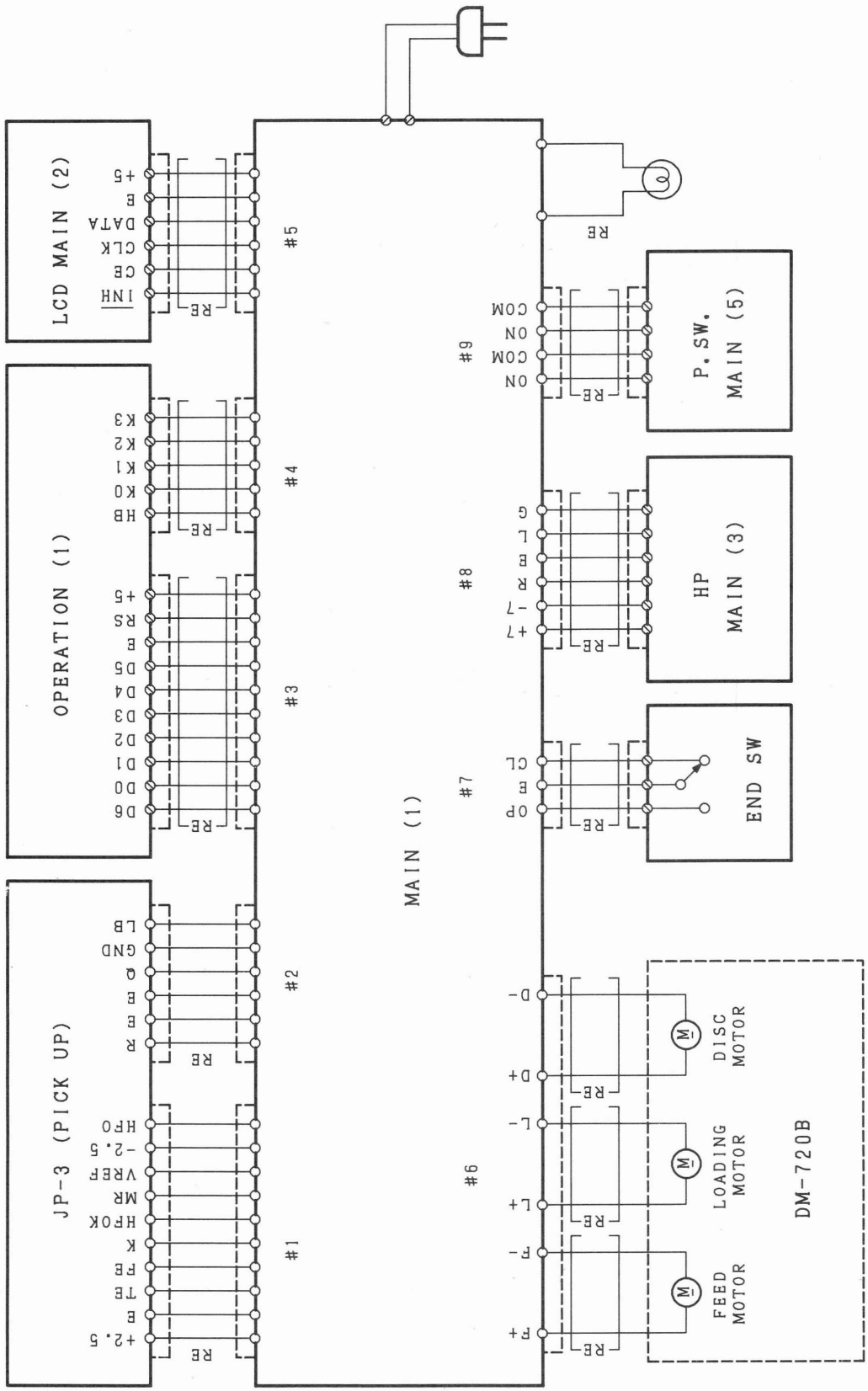

■ PRINTED CIRCUIT BOARD (Foil side)

Main Circuit Board (1)

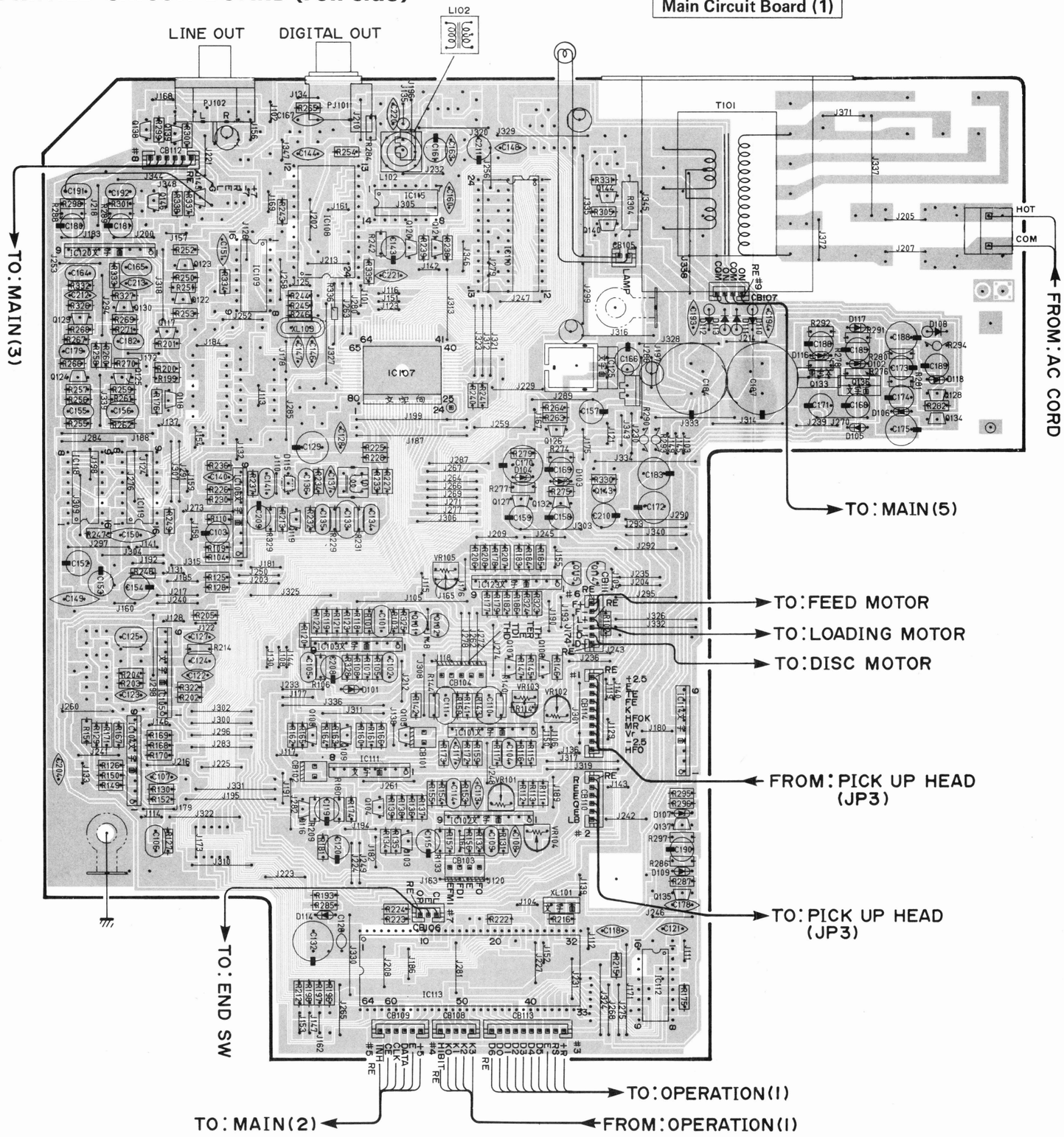

R Model

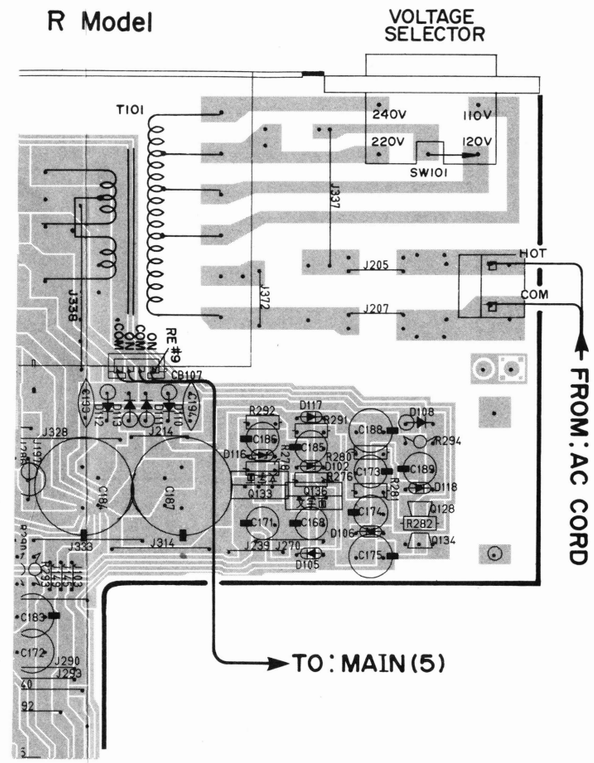

■ PRINTED CIRCUIT BOARD (Foil side)

Main Circuit Board (2)

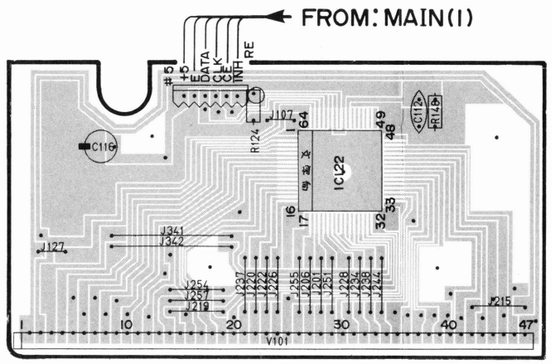

Main Circuit Board (3)

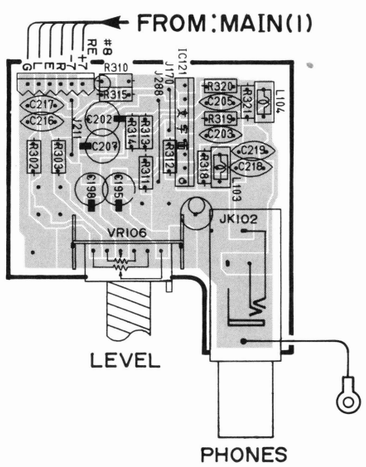

Main Circuit Board (5)

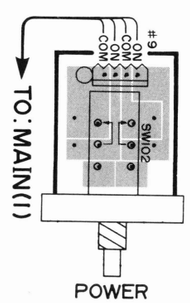

Operation Circuit Board

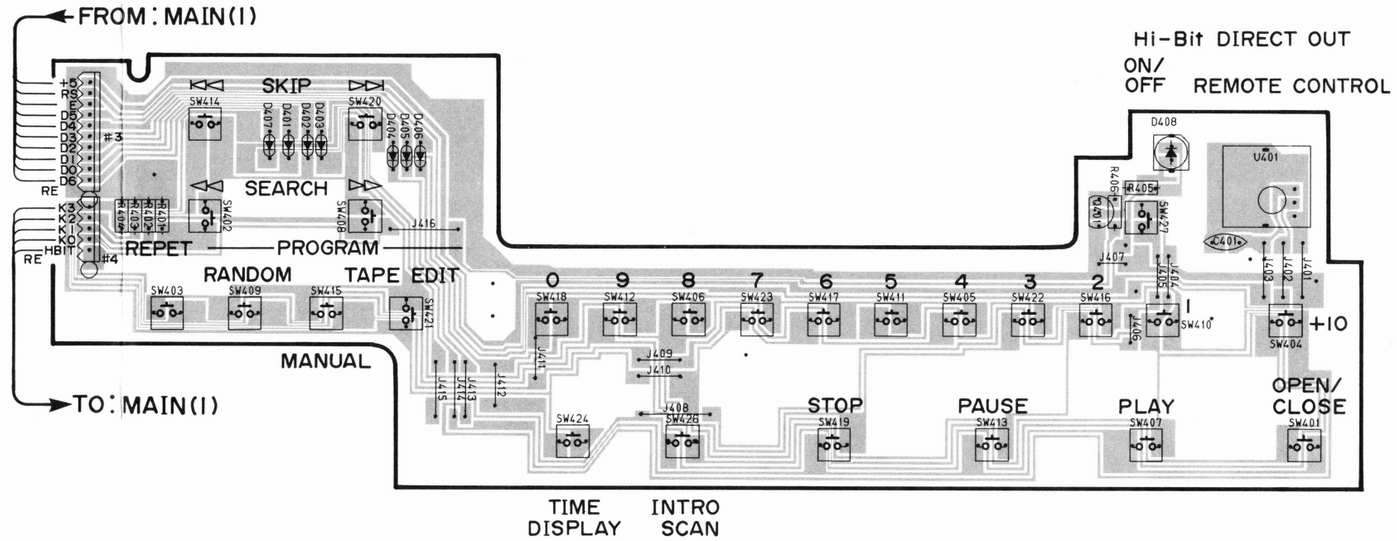

SCHEMATIC DIAGRAM

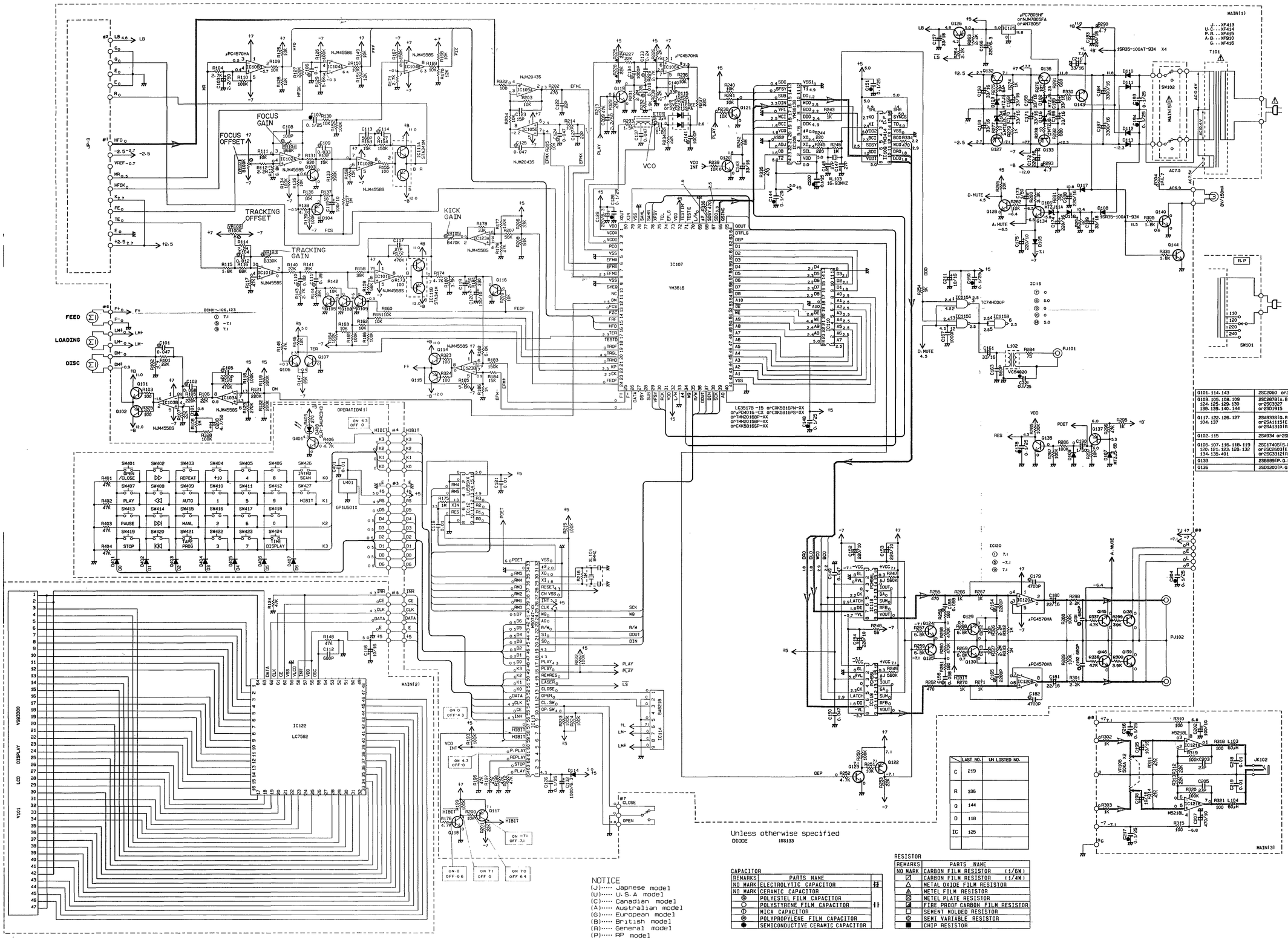

Q101. 114. 143	2SC2060 or 2SD400
Q103. 105. 108. 109 124. 125. 129. 130 138. 139. 140. 144	2SC2878(A. B) or 2SC3327 or 2SD1915
Q117. 122. 126. 127 104. 137	2SA933S(Q. R) or 2SA1115(E. F) or 2SA1310(R. S. T)
Q102. 115	2SA934 or 2SB544
Q106. 107. 116. 118. 119 120. 121. 123. 128. 132 134. 135. 401	2SC1740S(S. R) or 2SC2603(E. F) or 2SC3312(R. S. T)
Q133	2SB889(P. Q. R)
Q136	2SD1200(P. Q. R)

Unless otherwise specified
DIODE 1SS133

	LAST NO.	UN LISTED NO.
C	219	
R	336	
Q	144	
D	118	
IC	125	

NOTICE
(J)····· Japnese model
(U)····· U. S. A model
(C)····· Canadian model
(A)····· Australian model
(G)····· European model
(B)····· British model
(R)····· General model
(P)····· RP model

CAPACITOR

REMARKS	PARTS NAME
NO MARK	ELECTROLYTIC CAPACITOR
NO MARK	CERAMIC CAPACITOR
◎	POLYESTEL FILM CAPACITOR
○	POLYSTYRENE FILM CAPACITOR
①	MICA CAPACITOR
ⓟ	POLYPROPYLENE FILM CAPACITOR
●	SEMICONDUCTIVE CERAMIC CAPACITOR

RESISTOR

REMARKS	PARTS NAME
NO MARK	CARBON FILM RESISTOR (1/6W)
◪	CARBON FILM RESISTOR (1/4W)
△	METAL OXIDE FILM RESISTOR
⚠	METEL FILM RESISTOR
⊠	METEL PLATE RESISTOR
◪	FIRE PROOF CARBON FILM RESISTOR
□	SEMENT MOLDED RESISTOR
⊘	SEMI VARIABLE RESISTOR
■	CHIP RESISTOR

PIN CONNECTION DIAGRAM OF TRANSISTORS, DIODES AND ICS.

2SA933S (Q, R) 2SA1115 (E, F) 2SA1310 (R, S, T) 2SA934 2SB544 2SC1740S (S, R) 2SC2603 (E, F) 2SC3312 (R, S, T)	2SC2060 2SD400 2SC2878 (A, B) 2SC3327 2SD1915	2SB889 (P, Q, R) 2SD1200 (P, Q, R)	ISR35-100A ISS133 MTZJ3.6A MTZJ5.6B MTZJ8.2A MTZJ11A	ISV55 SVC211	μPC7805HF NJM7805FA AN7805F	NJM4558S NJM2043S μPC4570HA	M5218L	BA6218	STA451M	TC74HC00P	YM3414 PCM56L	LU59526	YM3613B μPD4016-CX LC3517B-15 TMM2015BP TMM2016BP CXK5816SP CXK5816PN CXK5816PS	M50747-731SP	YM3616	LC7582

* All voltages are measured with a 10MΩ/DC electric volt meter.
* Components having special characteristics are marked ⚠ and must be replaced with parts having specifications equal to those originally installed.
* Schematic diagram is subject to change without notice.

RS-CDX520
REMOTE CONTROL TRANSMITTER

SCHEMATIC DIAGRAM

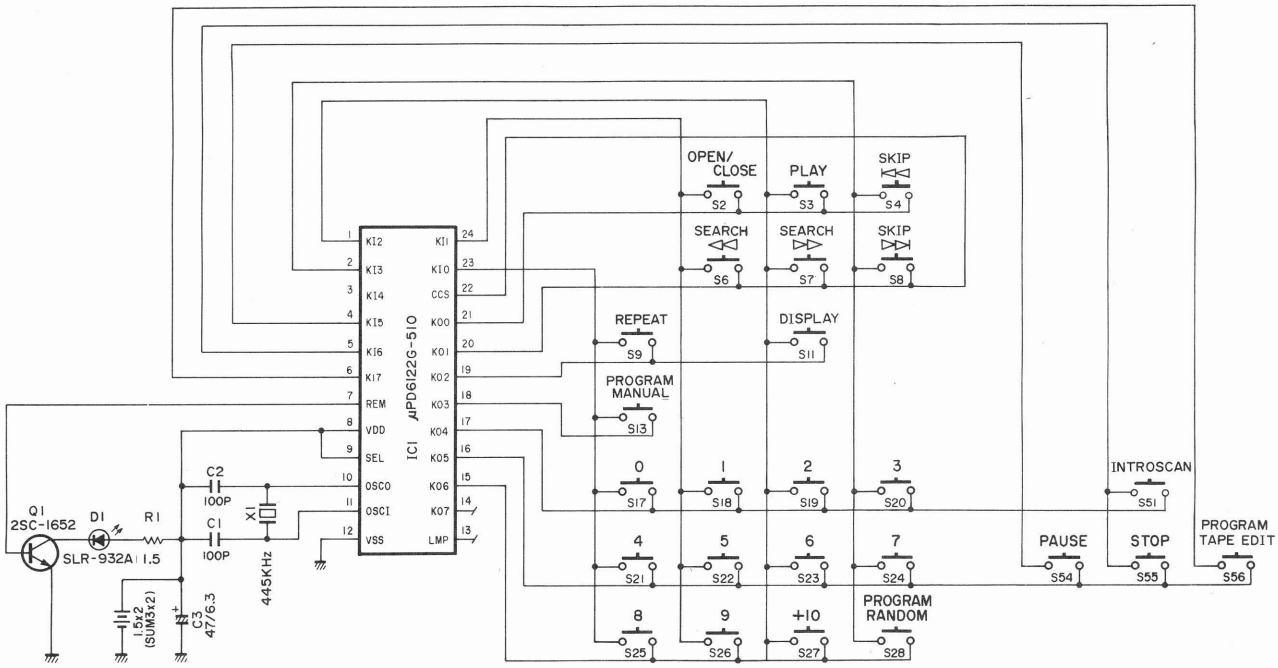

CUSTOM CODE

KEY No.	DATA CODE D0	D1	D2	D3	D4	D5	D6	D7	FUNCTION
2	1	0	0	0	0	0	0	0	OPEN/CLOSE
3	0	1	0	0	0	0	0	0	PLAY
4	1	1	0	0	0	0	0	0	SKIP ◁◁
6	1	0	1	0	0	0	0	0	SEARCH ◁◁
7	0	1	1	0	0	0	0	0	SEARCH ▷▷
8	1	1	1	0	0	0	0	0	SKIP ▷▷
9	0	0	0	1	0	0	0	0	REPEAT
11	0	1	0	1	0	0	0	0	DISPLAY
13	0	0	1	1	0	0	0	0	PROGRAM MANUAL
17	0	0	0	0	1	0	0	0	0
18	1	0	0	0	1	0	0	0	1
19	0	1	0	0	1	0	0	0	2
20	1	1	0	0	1	0	0	0	3
21	0	0	1	0	1	0	0	0	4
22	1	0	1	0	1	0	0	0	5
23	0	1	1	0	1	0	0	0	6
24	1	1	1	0	1	0	0	0	7
25	0	0	0	1	1	0	0	0	8
26	1	0	0	1	1	0	0	0	9
27	0	1	0	1	1	0	0	0	+10
28	1	1	0	1	1	0	0	0	PROGRAM RANDOM
51	0	1	0	0	1	0	1	0	INTRO SCAN
54	1	0	1	0	1	0	1	0	PAUSE
55	0	1	1	0	1	0	1	0	STOP
56	1	1	1	0	1	0	1	0	PROGRAM TAPE EDIT

PARTS LIST

	Ref. No.	Part No.	Description		部品名	Remarks	Common Model	Markets	ランク
※		VH 03 01 00	Remote Control Transmitter		リモートコントロールトランスミッター				
		CX 60 72 00	Lid		電池ケース				
			Dry Cell	AAA, R03	単4乾電池				

※New Parts（新規部品）NR

PARTS LIST

■WARNING

Components having special characteristics are marked ⚠ and must be replaced with parts having specifications equal to those originally installed.

- Carbon resistors (1/6W or 1/4W) are not included in the ELECTRICAL PARTS list. For the parts No. of the carbon resistor, refer to p. 45.

■ELECTRICAL PARTS

	Ref. No.	Part No.	Description			部品名	Remarks	Common Model	Markets	ランク
※		VG 95 21 00	Main Circuit Board			メインシート	Black		J	
※		VG 95 22 00	〃			〃	〃		U,C	
※		VG 95 23 00	〃			〃	〃		R,P	
※		VG 95 24 00	〃			〃	〃		A,B	
※		VG 95 25 00	〃			〃	〃		G	
※		VG 95 26 00	〃			〃	Silver		J	
※		VG 95 27 00	〃			〃	〃		U,C	
※		VG 95 28 00	〃			〃	〃		R,P	
※		VG 95 29 00	〃			〃	〃		A,B	
※		VG 95 30 00	〃			〃	〃		G	
		FA 15 31 00	Mylar Cap.	1000pF	50V	マイラーコン	C134,141			
		UA 25 26 80	〃	680pF	50V	〃	C191,192			
		FA 15 32 20	〃	2200pF	50V	〃	C105,164,165			
		FA 15 34 70	〃	4700pF	50V	〃	C179,182			
		FA 15 41 00	〃	0.01μF	50V	〃	C136			
		FA 15 41 20	〃	0.012μF	50V	〃	C104			
		FA 15 41 80	〃	0.018μF	50V	〃	C135			
		FA 15 43 30	〃	0.033μF	50V	〃	C109			
		FA 15 44 70	〃	0.047μF	50V	〃	C101,124,125			
		FA 15 46 80	〃	0.068μF	50V	〃	C102,155,156			
		FA 15 51 00	〃	0.1μF	50V	〃	C106			
		FA 15 52 40	〃	0.24μF	50V	〃	C133			
		FA 15 52 70	〃	0.27μF	50V	〃	C114			
		FA 15 53 90	〃	0.39μF	50V	〃	C111			
		FA 15 58 20	〃	0.82μF	50V	〃	C110			
		FZ 00 41 30	Semiconductive Ceramic Cap.	0.1μF	25V	半導体セラコン	C107,128,144,148,151,160,178,193,194,204,216,217,220,221			
		VA 76 21 00	Ceramic Cap.	0.1μF	25V	積層セラコン	C126			
		VA 76 11 00	〃	27pF	50V(CH)	セラコン	C146,147			
		FG 21 11 50	〃	15pF	50V	〃	C123			
		FG 21 12 20	〃	22pF	50V	〃	C122,127,201			
		FG 21 12 70	〃	27pF	50V	〃	C117,203,205			
		FG 21 13 30	〃	33pF	50V	〃	C140,212,213			
		FG 21 21 00	〃	100pF	50V	〃	C108			
		FG 21 25 60	〃	560pF	50V	〃	C113,163			
		FG 21 26 80	〃	680pF	50V	〃	C112			
		FG 21 31 00	〃	1000pF	50V	〃	C167			
		FG 24 41 00	〃	0.01μF	50V	〃	C118,121,218,219			
		FG 24 44 70	〃	0.047μF	50V	〃	C137,149,150			
		UJ 11 82 20	Electrolytic Cap.	220μF	6.3V	ケミコン	C129,166			
		UJ 11 91 00	〃	1000μF	6.3V	〃	C132			
		UJ 12 81 00	〃	100μF	10V	〃	C115,120,202			
		UJ 12 84 70	〃	470μF	10V	〃	C207			
		UJ 12 82 20	〃	220μF	10V	〃	C175			
		UJ 13 71 00	〃	10μF	16V	〃	C116,195,198,211			
		UJ 13 73 30	〃	33μF	16V	〃	C143,157～159,161,168～171,185,186,189,210			
		UJ 13 82 20	〃	220μF	16V	〃	C172,174,183,188			
		UJ 16 61 00	〃	1μF	50V	〃	C173,190			
		UH 16 62 20	〃	2.2μF	50V	〃	C103,119,209			
		UJ 16 64 70	〃	4.7μF	50V	〃	C208			
		UJ 12 82 20	〃	220μF	10V	〃	C152～154			
		UJ 13 72 20	〃	22μF	16V	〃	C180,181			
		UH 13 93 30	〃	3300μF	16V	〃	C184,187			

※New Parts（新規部品）NR

	Ref. No.	Part No.	Description		部品名	Remarks	Common Model	Markets	ランク
		VE 22 24 00	Ceramic Oscillator	8MHz	セラミック発振子	XL101			
		VC 39 88 00	Quartz Crystal Unit	16.93MHz	水晶振動子	XL103			
		VD 47 37 00	SB Coil	60μH	SBコイル	L103,104			
		GE 90 20 00	OSC Coil	3.3μH	OSCコイル	L101			
※		XF 41 3A 00	Power Transformer		電源トランス	T101		J	⚠
※		XF 41 4A 00	〃		〃	〃		U,C	⚠
※		XF 41 5A 00	〃		〃	〃		R,P	⚠
※		XF 41 6A 00	〃		〃	〃		G	⚠
※		XF 91 0A 00	〃		〃	〃		A,B	⚠
		VC 54 82 00	Pulse Trans		パルストランス	L102			
		HX 60 07 60	Carbon Resistor	470Ω 1/4W	カーボン抵抗	R336			
		HV 45 34 70	Flame Proof Carbon Resistor	4.7Ω 1/4W	不燃化カーボン抵抗	R290,293			
		HV 45 61 00	〃	1kΩ 1/4W	〃	R294			
		VF 45 91 00	Metal Film Resistor	2.2kΩ 1/4W	金属被膜抵抗	R226,230			
		VF 45 92 00	〃	22kΩ 1/4W	〃	R225,228			
		HL 31 34 70	Metal Oxide Film Resistor	4.7Ω 1W	酸金抵抗	R304			
		VC 61 25 00	Pre-Set Potentiometer	B68kΩ	半固定抵抗	VR104			
		VB 86 19 00	〃	B100kΩ	〃	VR101,102			
		VB 86 21 00	〃	B330kΩ	〃	VR103			
		VB 86 22 00	〃	B470kΩ	〃	VR105			
※		VG 86 13 00	Potentiometer	A50kΩ×2	二連ロータリーボリューム	VR106			
		iA 09 33 00	Transistor	2SA933S(Q,R)	トランジスタ	Q104,117,122,126,127,137	Inter-changeable		
		iA 11 15 10	〃	2SA1115(E,F)	〃	〃			
		iA 13 10 00	〃	2SA1310(R,S,T)	〃	〃			
		iA 09 34 10	〃	2SA934	〃	Q102,115	Inter-changeable		
		iB 05 44 00	〃	2SB544	〃	〃			
		iC 17 40 00	〃	2SC1740S(R,S)	〃	Q106,107,116,118～121,123,128,132,134,135	Inter-changeable		
		iC 26 03 10	〃	2SC2603(E,F)	〃	〃			
		iC 33 12 00	〃	2SC3312(R,S,T)	〃	〃			
		iC 20 60 00	〃	2SC2060	〃	Q101,114,143			
		iD 04 00 00	〃	2SD400	〃	〃			
		iC 28 78 20	〃	2SC2878(A,B)	〃	Q103,105,108,109,124,125,129,130,138～140,144～146	Inter-changeable		
		iC 33 27 00	〃	2SC3327	〃	〃			
		VC 50 21 00	〃	2SD1915	〃	〃			
		VB 31 14 00	〃	2SB889(P,Q,R)	〃	Q133			
		VB 31 13 00	〃	2SD1200(P,Q,R)	〃	Q136			
		iF 00 34 50	Diode	1SS133	ダイオード	D101,105,109,114,117,118			
		iH 00 14 30	〃	1SR35-100A	〃	D108,110～113			
		VG 43 62 00	Zener Diode	MTZJ3.6A	ツェナーダイオード	D103,104			
		VG 43 77 00	〃	MTZJ5.6B	〃	D107			
※		VG 43 88 00	〃	MTZJ8.2A	〃	D102,116			
※		VG 43 98 00	〃	MTZJ11A	〃	D106			
		iF 00 49 10	Varactor Diode	1SV55	FMバラクターダイオード	D115	Inter-changeable		
		iF 00 49 20	〃	SVC211	〃	〃			
※		VG 93 38 00	LCD Display		LCD表示器	V101			

※New Parts（新規部品）NR

Ref. No.	Part No.	Description		部品名	Remarks	Common Model	Markets	ランク
	iG 07 68 00	IC	NJM4558S	I C	IC101～104,123			
	iG 08 02 00	〃	NJM2043S	〃	IC105			
	iG 11 92 00	〃	μPD4016-CX	〃	IC110			
	XD 84 30 01	〃	TMM2016BP	〃	〃 Inter-changeable			
	XD 87 60 01	〃	CXK5816PM	〃	〃			
	XE 09 70 01	〃	CXK5816PS	〃	〃			
	iG 05 82 10	〃	M5218L	〃	IC121			
	iG 15 35 00	〃	BA6218	〃	IC114			
	iR 00 00 00	〃	TC74HC00P	〃	IC115			
	VC 16 07 00	〃	STA341M	〃	IC111			
	XB 24 70 01	〃	μPC4570HA	〃	IC106,120			
	XB 41 70 01	〃	LC7582	〃	IC122			
	XC 43 50 01	〃	μPC7805HF	〃	IC125 Inter-changeable			
	XD 33 80 01	〃	AN7805F	〃	〃			
	XF 31 1A 00	〃	LU59526	〃	IC112			
※	XF 94 2A 00	〃	M50747-731SP	〃	IC113			
	XD 89 80 01	〃	PCM56L	〃	IC118,119			
	XB 69 80 01	〃	YM3616	〃	IC107			
	XC 85 30 01	〃	YM3613B	〃	IC108			
	XD 71 20 01	〃	YM3414	〃	IC109			
	VG 38 81 00	Voltage Selector		電圧切換器	SW101		R,P	⚠
※	VH 50 75 00	Push Switch	SPUL12	プッシュスイッチ	SW102			⚠
	LB 30 24 20	Phone Jack	Gray	ホーンジャック	JK102 Silver			
	LB 30 24 30	〃	Black	〃	〃 Black			
	VF 09 65 00	Pin Jack	2P	ピンジャック	PJ102			
	VG 02 01 00	〃	1P	〃	PJ101			
	LB 20 13 90	Base Pin	2P TE-Type	2.5ピッチベースピン	CB101,102			
	LB 40 05 70	〃	4P TE-Type	〃	CB103			
	LB 50 02 50	〃	5P TE-Type	〃	CB104			
	VD 00 45 00	〃	2P i-Type	PHベースピン	CB105			
	VD 00 46 00	〃	3P i-Type	〃	CB106			
	VD 00 47 00	〃	4P i-Type	〃	CB107			
	VD 00 48 00	〃	5P i-Type	〃	CB108			
	VD 00 49 00	〃	6P i-Type	〃	CB109～112			
	VD 00 53 00	〃	10P i-Type	〃	CB113,114			
	LA 00 21 40	Lapping Terminal	2P P=10 i-Type	i型ラッピング端子板			U,C,G	
	VE 22 57 00	Base Post	2P	ベースポスト			J,R,A,B,P	
	LA 00 41 20	Test Point Pin	1P	テストポイントピン				
	VB 96 69 00	Pin		スタイルピン			J,R,A,B,P	
	BA 08 40 00	Heat Sink		放熱板				
	BB 06 62 90	Ground Washer		アースワッシャー				
	VG 33 58 00	Reflector		リフレクタ				
	VH 04 12 00	Sheet Diffusion		シート，ディフュージョン				
	CB 60 56 20	Plastic Rivet		プラスチックリベット				
	Ei 33 00 86	Binding Head Tapping Screw	3×8 FCRM3-BI	バインドタッピングネジ	PACK			

※New Parts（新規部品）NR

	Ref. No.	Part No.	Description		部品名	Remarks	Common Model	Markets	ランク
※		***VG 95 11 00***	***Operation Circuit Board***		オペレーションシート				
		FG 24 41 00	Ceramic Cap.	0.01μF 50V	セラコン	C401			
		iC 17 40 00	Transistor	2SC1740S(R,S)	トランジスタ	Q401			
		iC 26 03 10	〃	2SC2603(E,F)	〃	〃 Inter-changeable			
		iX 60 31 80	〃	2SC3312(R,S,T)	〃	〃			
		iF 00 34 50	Diode	1SS133	ダイオード	D401～407			
		iF 00 87 30	LED(Red)	SLR-34URC3H3	LED	D408			
※		VF 92 65 00	Receiver Unit	GP1U501X	受光ユニット	U401			
		VG 39 29 00	Switch	SKHVAA	ラジアルタクトスイッチ	SW401～424,426,427			

※New Parts（新規部品）NR

EXPLODED VIEW

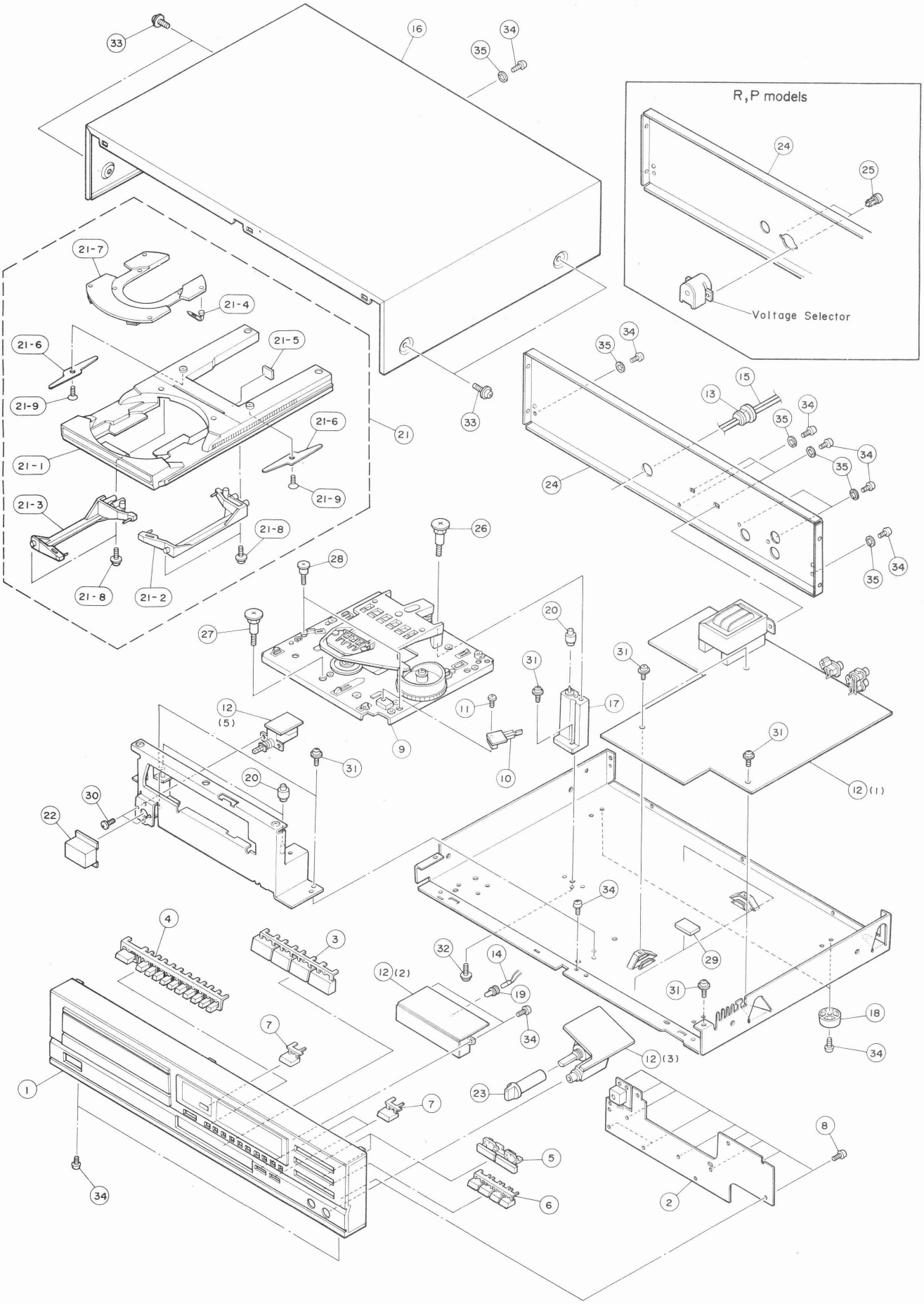

■ MECHANISM PARTS

Note) ϕ : Diameter

	Ref. No.	Part No.	Description		部品名	Remarks	Common Model	Markets	ランク
※	1	VG 95 79 00	Front Panel Ass'y		フロントパネル Ass'y	Black CDX-520		J,U,C,G,P	
※	〃	VG 95 80 00	〃		〃	〃 CD-1050		R,A,B	
※	〃	VG 95 81 00	〃		〃	Silver CDX-520		J,U,C,G,P	
※	〃	VG 95 82 00	〃		〃	〃 CD-1050		R,A,B	
※	2	VG 95 11 00	Operation Circuit Board		オペレーションシート				
※	3	VG 70 43 00	Button	4P	ボタン	Black			
※	〃	VG 70 44 00	〃	4P	〃	Silver			
※	4	VG 39 72 00	〃		〃	Black 10key			
※	〃	VG 39 73 00	〃		〃	Silver 〃			
※	5	VD 81 25 00	〃		〃	Black SKIP,SEARCH			
※	〃	VG 70 47 00	〃		〃	Silver 〃			
※	6	VG 70 49 00	〃		〃	Black PROGRAM,REPEAT			
※	〃	VG 70 50 00	〃		〃	Silver 〃			
	7	VD 37 07 00	〃	1P	〃	Black			
	〃	VE 51 46 00	〃	1P	〃	Silver	CDX-510		
	8	Ei 33 00 86	Binding Head Tapping Screw	3×8 FCRM3-BI	バインドタッピングネジ	PACK			
※	9	VH 55 45 00	Disc Mechanism Unit	DM-720B	DMユニット				
	10	KA 90 63 70	End Switch		エンドスイッチ				
	11	Ei 32 61 06	Binding Head Tapping Screw	2.6×10 ZMC2-BI	バインドタッピングネジ	PACK			
※	12	VG 95 21 00	Main Circuit Board		メインシート	Black		J	
※	〃	VG 95 22 00	〃		〃	〃		U,C	
※	〃	VG 95 23 00	〃		〃	〃		R,P	
※	〃	VG 95 24 00	〃		〃	〃		A,B	
※	〃	VG 95 25 00	〃		〃	〃		G	
※	〃	VG 95 26 00	〃		〃	Silver		J	
※	〃	VG 95 27 00	〃		〃	〃		U,C	
※	〃	VG 95 28 00	〃		〃	〃		R,P	
※	〃	VG 95 29 00	〃		〃	〃		A,B	
※	〃	VG 95 30 00	〃		〃	〃		G	
	13	CB 61 68 10	Cord Stopper	CM-22A	コードストッパー			J	
	〃	CB 62 02 00	〃	CM-22C	〃			U,C	
	〃	CB 62 01 90	〃	CM-22B	〃			R,A,B,G,P	
※	14	VG 93 36 00	Lamp	8V 150mA	ランプ				
	15	VE 22 30 00	Power Cord Ass'y	125V	電源コード Ass'y			J	⚠
	〃	MG 00 22 20	Power Cord	10A 125V	電源コード			U,C	⚠
	〃	VE 22 29 00	Power Cord Ass'y	250V	電源コード Ass'y			R,P	⚠
	〃	VE 04 29 00	〃	250V	〃			A	⚠
	〃	VE 04 31 00	〃		〃			B	⚠
	〃	MG 00 23 20	Power Cord	2.5A 250V	電源コード			G	⚠
※	16	VG 39 79 00	Top Cover		トップカバー	Black			
※	〃	VG 39 80 00	〃		〃	Silver			
	17	VF 48 64 00	Support, E		サポート／E		CDX-710		
	18	VA 75 72 00	Leg		脚				
	19	VF 44 45 00	Cap, Lamp		ランプキャップ				
	20	VE 30 92 00	Damper		ダンパー		CDX-910		
※	21	VG 87 28 00	Tray Ass'y		トレイ Ass'y				
	21-1	VE 04 12 00	Tray, Disc		トレイ／ディスク				
	21-2	VE 26 98 00	Liffter Ass'y (L)		リフター Ass'y (L)				
	21-3	VE 26 99 00	〃 (R)		〃 (R)				
	21-4	VE 04 16 00	Pad, Disc		パッド／ディスク				
	21-5	CB 62 79 60	Cushion Rubber		クッションゴム				
	21-6	VE 04 18 00	Spring, BE		スプリング／BE				
	21-7	VE 30 60 00	Plate		プレート／710				

※New Parts（新規部品）NR

	Ref. No.	Part No.	Description		部品名	Remarks	Common Model	Markets	ランク
	21-8	EX 60 02 40	BW Head Tapping Screw	3×8(φ10) FCRM3-BI	BWヘッドタッピングネジ				
	21-9	EO 33 00 86	Flat Head Tapping Screw	3×8 FCRM3-BI	皿タッピングネジ	PACK			
	22	CB 66 08 10	Button		ボタン	Black POWER			
※	//	VG 71 70 00	//		//	Silver //			
	23	CB 65 91 00	knob		ツマミ	Black LEVEL	CDX-500		
	//	VC 51 70 00	//		//	Silver //	//		
※	24	VG 39 81 00	Rear Panel		リアパネル			J	
※	//	VG 39 82 00	//		//			U	
※	//	VG 39 83 00	//		//			C	
※	//	VG 39 85 00	//		//			R	
※	//	VG 39 86 00	//		//			A,B	
※	//	VG 39 87 00	//		//			G	
※	//	VG 95 76 00	//		//			P	
	25	CB 60 92 60	Plastic Rivet		プラスチックリベット			R	
	26	NB 63 83 90	Special Screw Ass'y		段付ネジ Ass'y		CD-X5		
	27	VG 61 55 00	//		//		CDX-710		
	28	VF 87 53 00	Special Screw		段付ネジ		//		
	29	VF 20 15 00	Damper		ダンパー		AV-33		
	30	ED 33 00 86	Binding Head Screw	3×8 FCRM3-BI	バインド小ネジ	PACK			
	31	EK 33 60 20	BW Head Tapping Screw	3×6(φ8) FCM3-BI	BWヘッドタッピングネジ				
	32	EX 60 10 90	//	3×12(φ10) FCM3-BI	//				
	33	EK 36 50 40	BW Head Screw	4×8(φ10) FCM3-BI	BWヘッド小ネジ				
	//	EK 13 00 20	//	4×8(φ10) FNM3-3G	//				
	34	Ei 33 01 06	Binding Head Tapping Screw	3×10 FCRM3-BI	バインドタッピングネジ	PACK			
	35	EV 41 30 36	Toothed Lock Washer	φ3 FCRM3-BI	歯付座金	PACK			
		VE 31 96 00	Connector	10P,6P	DM710ボードインキット		CDX-910		
		CB 06 92 51	Binding Tie	BK-1	インシュロックタイ	PACK			
			Accessories		付属品				
		Mi 08 87 90	Pin Pin Cord		ピンピンコード				
※		VH 03 01 00	Remote Control Transmitter		リモートコントロールトランスミッター				
			Dry Cell	UM-4,AAA,R03	単4乾電池				

※New Parts（新規部品）NR

EXPLODED VIEW (DM-720B)

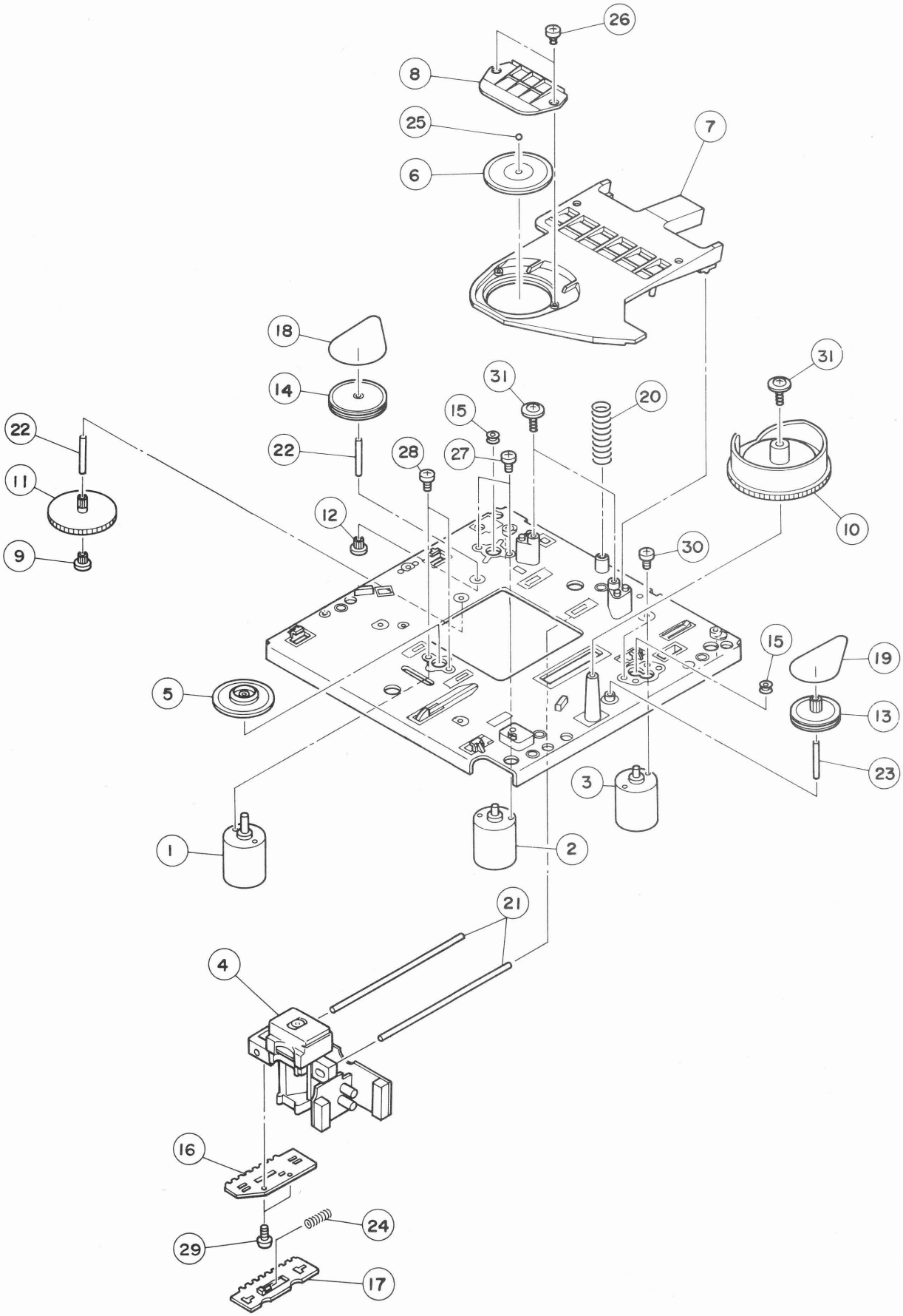

■ MECHANISM PARTS (DM-720B)

Ref. No.	Part No.	Description		部品名	Remarks	Common Model	Markets	ランク
※	***VH 55 45 00***	***Disc Mechanism Unit***	DM-720B	DMユニット				
1	VE 35 62 00	Motor		モーター	DISC	DM-710		
2	VE 35 61 00	〃		〃	FEED	〃		
3	VE 35 63 00	〃		〃	LOADING	〃		
4	VE 18 84 00	Optical Pick Up Head		光ピックアップヘッド		〃		
5	NB 62 99 70	Turntable Unit		ターンテーブルユニット2				
6	CB 64 24 00	Stabilizer		スタビライザー2				
7	VG 83 48 00	Flapper		フラッパー				
8	CB 65 55 40	Thrust Bearing		スラストベアリング2				
9	CB 65 55 50	Pinion Gear		ピニオンギア2				
10	CB 65 55 60	Loading Cam		ローディングカム3		DM-X5		
11	VE 02 29 00	Gear, Drive		ギヤー／ドライブ		DM-710		
12	VE 02 28 00	Gear, Pulley		ギヤー／プーリー		〃		
13	VE 98 00 00	Idle, Pulley		アイドルプーリー				
14	VE 02 30 00	Pulley, Feed		プーリー／フィード		DM-710		
15	CB 65 85 10	P. Pulley		Pプーリー				
16	VE 02 25 00	Rack, Gear A		ラック／ギヤーA		DM-710		
17	VE 02 26 00	Rack, Gear B		ラック／ギヤーB		〃		
18	VE 02 34 00	Belt, Feed		ベルト／フィード		〃		
19	VG 94 57 00	Belt, Loading		ベルト／ローディング		〃		
20	VE 64 78 00	Spring		スプリング／フラッパ				
21	VE 02 31 00	Shaft, PU710		シャフト／PU710		DM-710		
22	VE 02 33 00	Shaft, Drive Gear		シャフト／ドライブギヤー		〃		
23	AA 61 93 30	Shaft (S)		シャフト(S)				
24	VE 17 93 00	Spring		スプリング／ラック710				
25	VD 93 87 00	Roller, SP	φ2.5	ローラーSP				
26	Ei 32 60 56	Binding Head Tapping Screw	2.6×5 FCRM3-BI	バインドタッピングネジ	PACK			
27	ED 32 00 56	Bindind Head Screw	2×5 ZMC2-BI	バインド小ネジ	PACK			
28	ED 32 00 46	〃	2×4 ZMC2-BI	〃	PACK			
29	ED 32 60 66	〃	2.6×6 FCRM3-BI	〃	PACK			
30	ED 33 00 66	〃	3×6 FCRM3-BI	〃	PACK			
31	EK 33 00 10	BW Head Tapping Screw	3×12 FCRM3-BI	BWヘッドタッピングネジ				

※New Parts（新規部品）NR

Parts List for Carbon Resistors

Value	1/4W Type Part No.	1/6W Type Part No.	Value	1/4W Type Part No.	1/6W Type Part No.
1.0 Ω	HJ353100	HF853100	12KΩ	HJ357120	HF857120
1.8 〃	HJ353180	※	15 〃	HJ357150	HF857150
2.2 〃	HJ353220	HF853220	18 〃	HJ357180	HF857180
3.3 〃	HJ353330	HF853330	22 〃	HJ357220	HF857220
4.7 〃	HJ353470	HF853470	27 〃	HJ357270	HF857270
5.6 〃	HJ353560	HF853560	33 〃	HJ357330	HF857330
10 〃	HJ354100	HF854100	39 〃	HJ357390	HF857390
15 〃	HJ354150	HF854150	47 〃	HJ357470	HF857470
22 〃	HJ354220	HF854220	56 〃	HJ357560	HF857560
27 〃	HJ354270	HF854270	68 〃	HJ357680	HF857680
33 〃	HJ354330	HF854330	82 〃	HJ357820	HF857820
39 〃	HJ354390	HF854390	91 〃	HJ357910	HF857910
47 〃	HJ354470	HF854470	100 〃	HJ358100	HF858100
56 〃	HJ354560	HF854560	120 〃	HJ358120	HF858120
68 〃	HJ354680	HF854680	150 〃	HJ358150	HF858150
82 〃	HJ354820	HF854820	180 〃	HJ358180	HF858180
100 〃	HJ355100	HF855100	220 〃	HJ358220	HF858220
110 〃	HJ355110	HF855110	270 〃	HJ358270	HF858270
120 〃	HJ355120	HF855120	330 〃	HJ358330	HF858330
150 〃	HJ355150	HF855150	390 〃	HJ358390	HF858390
160 〃	HJ355160	※	470 〃	HJ358470	HF858470
180 〃	HJ355180	HF855180	560 〃	HJ358560	HF858560
220 〃	HJ355220	HF855220	680 〃	HJ358680	HF858680
270 〃	HJ355270	HF855270	820 〃	HJ358820	HF858820
330 〃	HJ355330	HF855330	1.0MΩ	HJ359100	HF859100
390 〃	HJ355390	HF855390	1.2 〃	HJ359120	※
470 〃	HJ355470	HF855470	1.5 〃	HJ359150	HF859150
510 〃	※	HF855510	1.8 〃	HJ359180	HF859180
560 〃	HJ355560	HF855560	2.2 〃	HJ359220	HF859220
680 〃	HJ355680	HF855680	3.3 〃	HJ359330	HF859330
820 〃	HJ355820	HF855820	3.9 〃	HJ359390	※
910 〃	HJ355910	HF855910	4.7 〃	HJ359470	HF859470
1.0KΩ	HJ356100	HF856100			
1.2 〃	HJ356120	HF856120			
1.5 〃	HJ356150	HF856150			
1.8 〃	HJ356180	HF856180			
2.0 〃	HJ356200	HF856200			
2.2 〃	HJ356220	HF856220			
2.4 〃	HJ356240	HF856240			
2.7 〃	HJ356270	HF856270			
3.0 〃	HJ356300	HF856300			
3.3 〃	HJ356330	HF856330			
3.6 〃	HJ356360	HF856360			
3.9 〃	HJ356390	HF856390			
4.7 〃	HJ356470	HF856470			
5.1 〃	HJ356510	HF856510			
5.6 〃	HJ356560	HF856560			
6.8 〃	HJ356680	HF856680			
8.2 〃	HJ356820	HF856820			
9.1 〃	HJ356910	HF856910			
10 〃	HJ357100	HF857100			

1/4W Type

HJ35○○○○

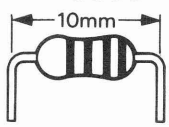

1/6W Type

HF85○○○○

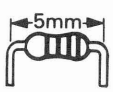

CDX-520/CD-1050

YAMAHA

CDX-520/
CD-1050