STEREO CONTROL AMPLIFIER

CX-2

SERVICE MANUAL

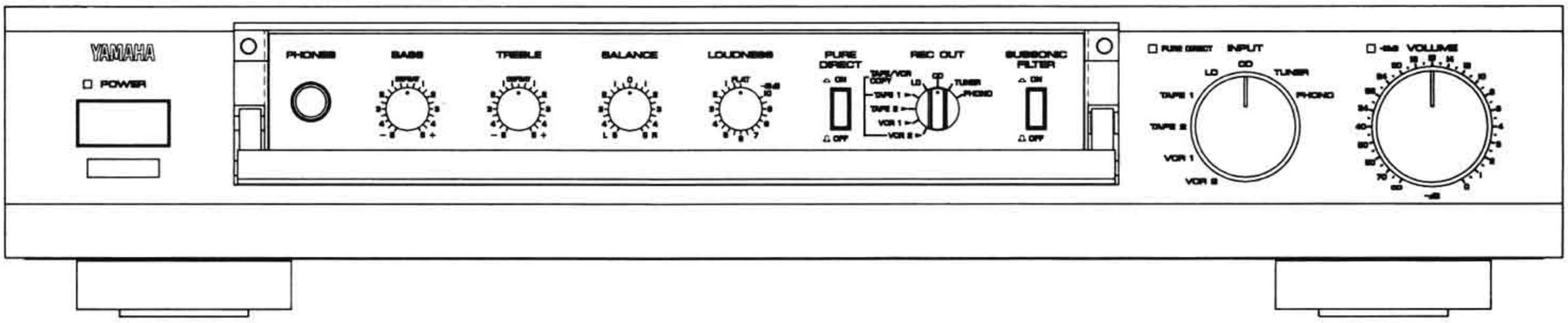

● U, C, R models

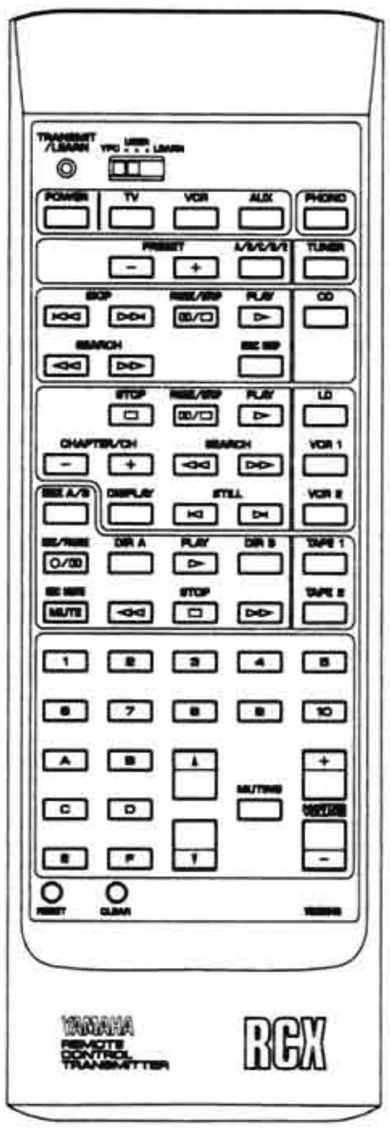

● A, B, G models

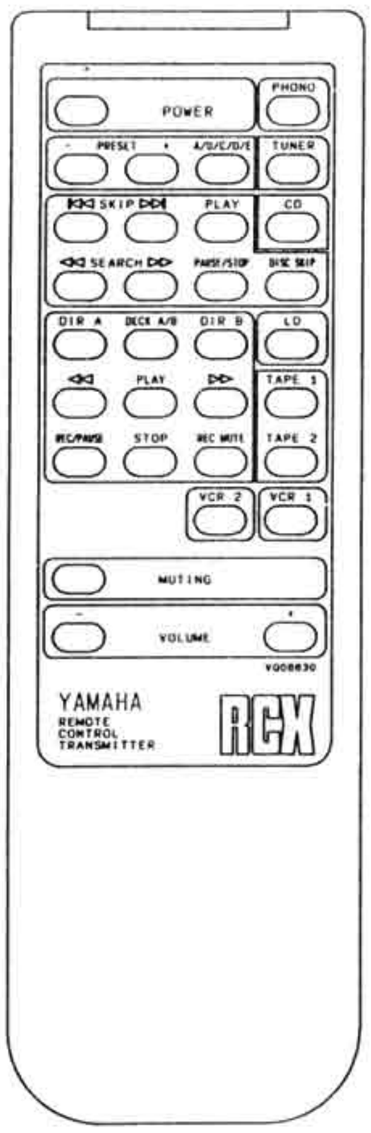

IMPORTANT NOTICE

This manual has been provided for the use of authorized YAMAHA Retailers and their service personnel.
It has been assumed that basic service procedures inherent to the industry, and more specifically YAMAHA Products, are already known and understood by the users, and have therefore not been restated.

WARNING: Failure to follow appropriate service and safety procedures when servicing this product may result in personal injury, destruction of expensive components, and failure of the product to perform as specified. For these reasons, we advise all YAMAHA product owners that any service required should be performed by an authorized YAMAHA Retailer or the appointed service representative.

IMPORTANT: The presentation or sale of this manual to any individual or firm does not constitute authorization, certification or recognition of any applicable technical capabilities, or establish a principle-agent relationship of any form.

The data provided is believed to be accurate and applicable to the unit(s) indicated on the cover. The reseach, engineering, and service departments of YAMAHA are continually striving to improve YAMAHA products. Modifications are, therefore, inevitable and specifications are subject to change without notice or obligation to retrofit. Should any discrepancy appear to exist, please contact the distributor's Service Division.

WARNING: Static discharges can destroy expensive components. Discharge any static electricity your body may have accumulated by grounding yourself to the ground buss in the unit (heavy gauge black wires connect to this buss).

IMPORTANT: Turn the unit OFF during disassembly and part replacement. Recheck all work before you apply power to the unit.

■ CONTENTS

TO SERVICE PERSONNEL 1
REAR PANELS 2
SPECIFICATIONS 3
INTERNAL VIEW 4
DISASSEMBLY PROCEDURES 4
PRINTED CIRCUIT BOARD ..... 5~11
BLOCK DIAGRAM ..... 12~13
μ-COM DATA 14
IC BLOCK 15
SCHEMATIC DIAGRAM ..... 16~17
PARTS LIST ..... 18~27
REMOTE CONTROL TRANSMITTER ..... 28~30

100459

YAMAHA
YAMAHA CORPORATION
P.O.Box1,Hamamatsu,Japan
3.05k-103 Printed in Japán '93.5

■ TO SERVICE PERSONNEL

1. Critical Components Information.
   Components having special characteristics are marked and must be replaced with parts having specifications equal to those originally installed.

2. Leakage Current Measurement (For 120V Models Only).
   When service has been completed, it is imperative to verify that all exposed conductive surfaces are properly insulated from supply circuits.

- Meter impedance should be equivalent to 1500 ohm shunted by 0.15μF.
- Leakage current must not exceed 0.5mA.
- Be sure to test for leakage with the AC plug in both polarities.

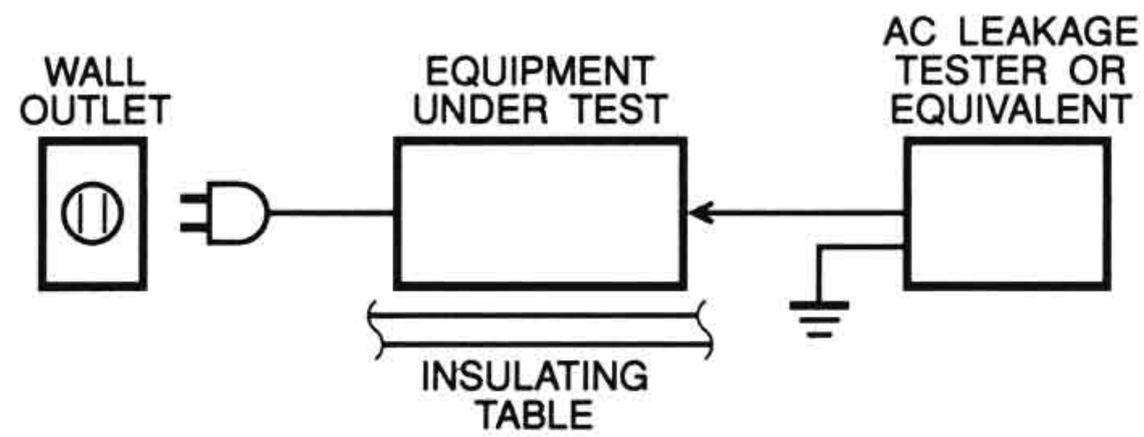

WARNING: CHEMICAL CONTENT NOTICE!

The solder used in the production of this product contains LEAD. In addition, other electrical/electronic and/or plastic (where applicable) components may also contain traces of chemicals found by the California Health and Welfare Agency (and possibly other entities) to cause cancer and/or birth defects or other reproductive harm.

DO NOT PLACE SOLDER, ELECTRICAL/ELECTRONIC OR PLASTIC COMPONENTS IN YOUR MOUTH FOR ANY REASON WHATSOEVER!

Avoid prolonged, unprotected contact between solder and your skin! When soldering, do not inhale solder fumes or expose eyes to solder/flux vapor!

If you come in contact with solder or components located inside the enclosure of this product, wash your hands before handling food.

■ REAR PANELS

▼ U, C models

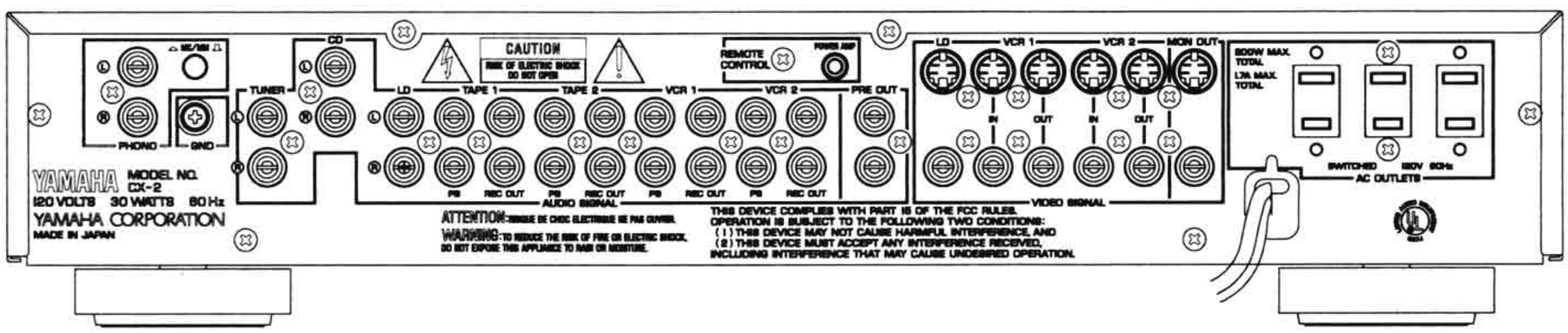

▼ R model

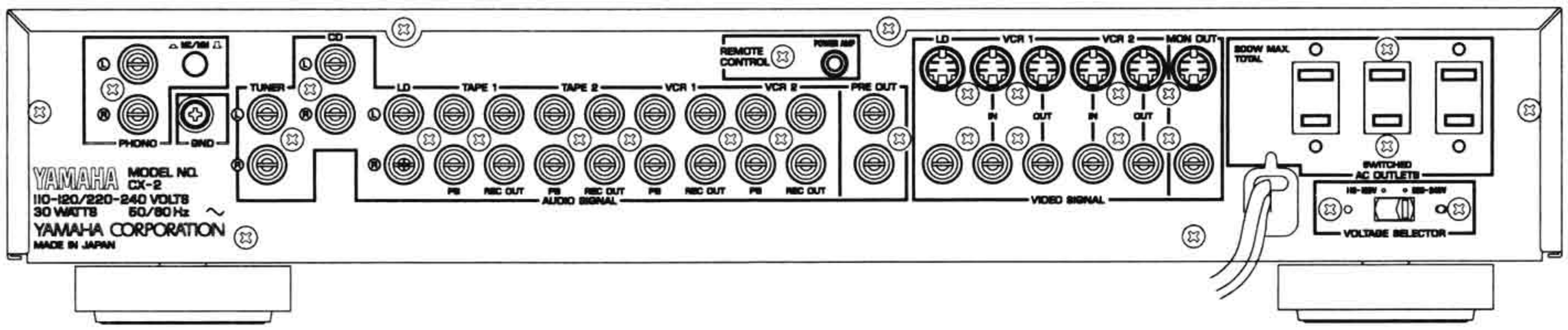

▼ A model

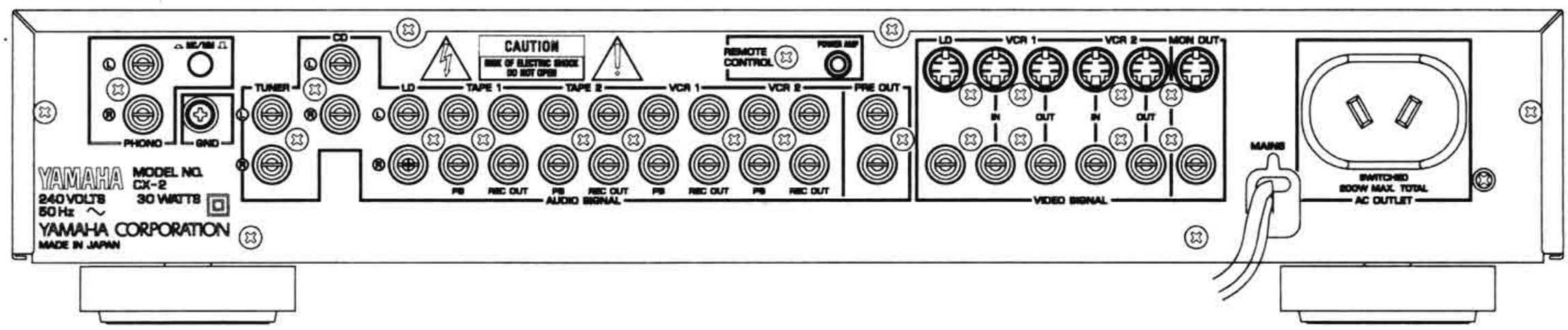

▼ B model

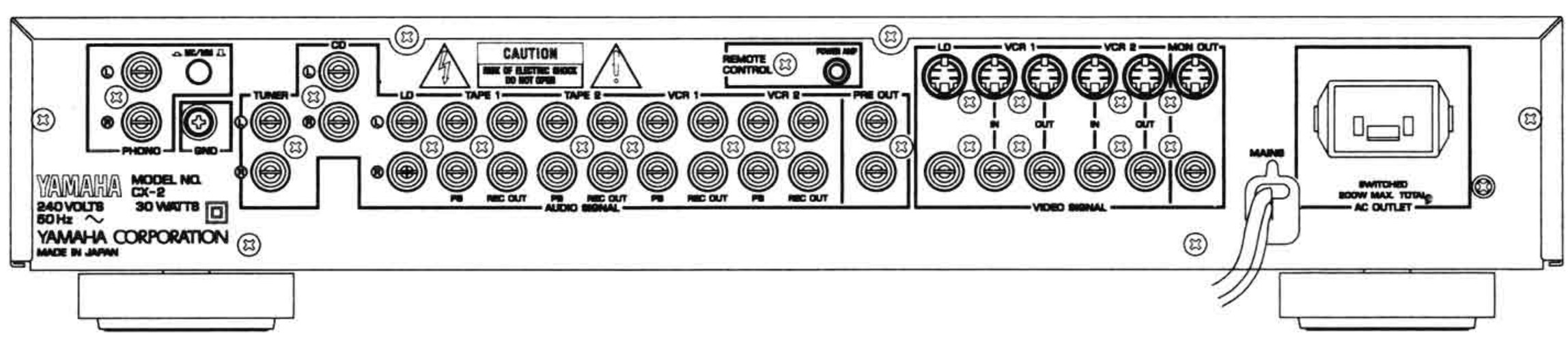

▼ G model

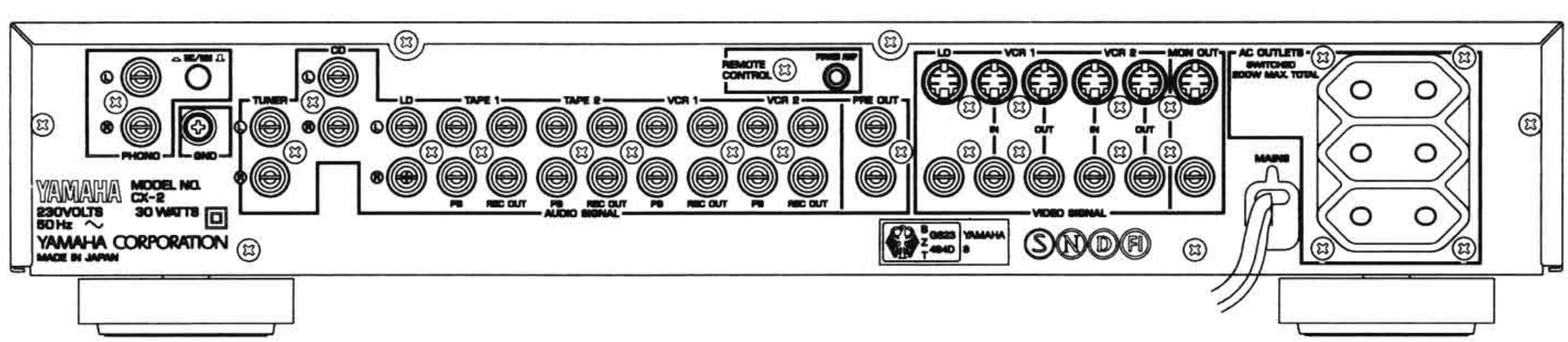

■ SPECIFICATIONS

Input Sensitivity/Impedance	
Phono MC	100μV/100Ω
Phono MM	2.5mV/47kΩ
CD etc	150mV/47kΩ
Input Sensitivity (New IHF)	
Phono MC	33μV
Phono MM	0.83mV
CD etc	50mV
Maximum Input Signal (1kHz)	
Phono MC 0.03% THD	6mV
Phono MM 0.01% THD	150mV
Output Level/Impedance	
Rec Out	150mV/2.5kΩ
Pre Out	1.5V/47Ω
Maximum Output Voltage (20Hz~20kHz 1% THD)	
Pre Out	8.0V
Headphone Jack Rated Output/Impedance	
0.01% THD RL=150Ω	4.0V/68Ω
Frequency Response (20Hz~20kHz)	
CD etc	0 ± 0.2dB
RIAA Equalization Deviation	
Phono MC/MM 20Hz~20kHz	±0.3/±0.2dB
Total Harmonic Distortion (20Hz~20kHz)	
Phono MC to Rec Out 3V	0.004%
Phono MM to Rec Out 3V	0.002%
CD etc to Pre Out 1.5V	0.002%
Signal to Noise Ratio (IHF-A Network)	
Phono MC (500μV Input Shorted)	82dB
Phono MM (5mV Input Shorted)	94dB
CD/Tuner etc (Shorted)	110/106dB
Residual Noise (IHF-A Network)	1μV
Channel Separation (Vol. –30dB)	
Phono MM, MC	
(Input Shorted 1kHz/10kHz)	75dB/65dB
CD etc	
(Input 5.1kΩ terminated 1kHz/10kHz)	75dB/60dB
Tone Control Characteristics	
BASS boost/cut	±10dB (20Hz)
TREBLE boost/cut	±10dB (20kHz)
Video Input Sensitivity/Impedance	
LD, VCR1, VCR2	1Vp-p/75Ω
Video Output Sensitivity/Impedance	
Monitor Out, VCR Out	1Vp-p/75Ω
Filter Characteristics	
Subsonic (15Hz)	–18dB/oct
Continuous Loudness Control (Level Related Equalization)	
Attenuation	–40dB (1kHz)

Audio Muting	–20dB
Gain Tracking Error (0~–60dB)	2dB
Power Supply	
R model	AC110V—120/220—240V, 50/60Hz
U, C models	AC120V, 60Hz
A, B models	AC240V, 50Hz
G model	AC230V, 50Hz
Power Consumption	30W
AC Outlet	
Switched x 3	
U, C models	Total 200W max.
	Total 1.7A max.
G, R models	Total 200W max.
Switched x 1	
A, B models	Total 200W max.
Dimensions (W x H x D)	435 x 86 x 319mm
	(17-1/8" x 3-3/8" x 12-9/16")
Weight	5.4kg (11lbs 14oz)

** Specifications subject to change without notice.*

U .....U.S.A. Model
C .....Canadian Model
A .....Australian Model
B .....British Model
G .....European Model
R .....General Model

● DIMENSIONS

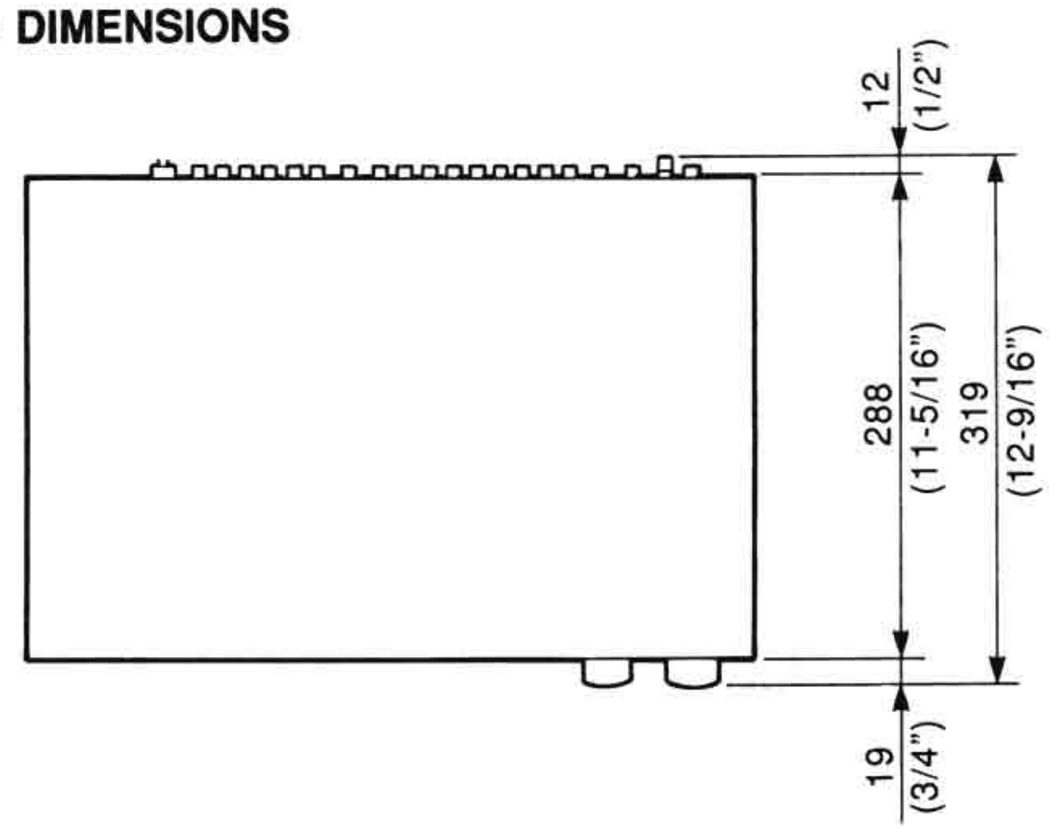

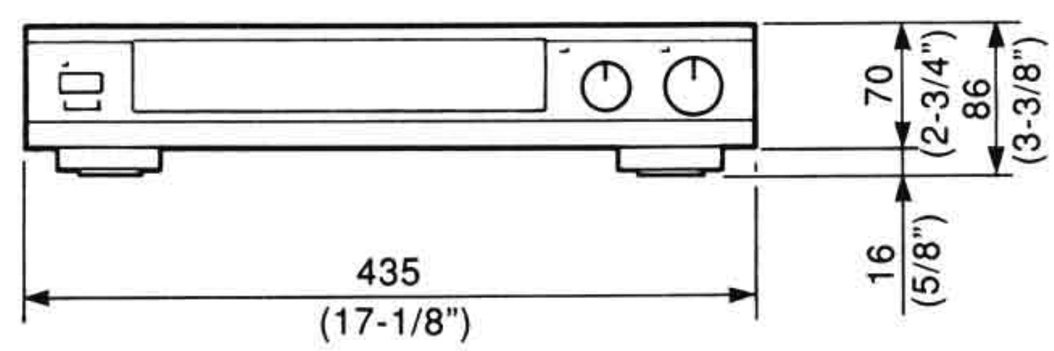

Units : mm (inch)

■ INTERNAL VIEW

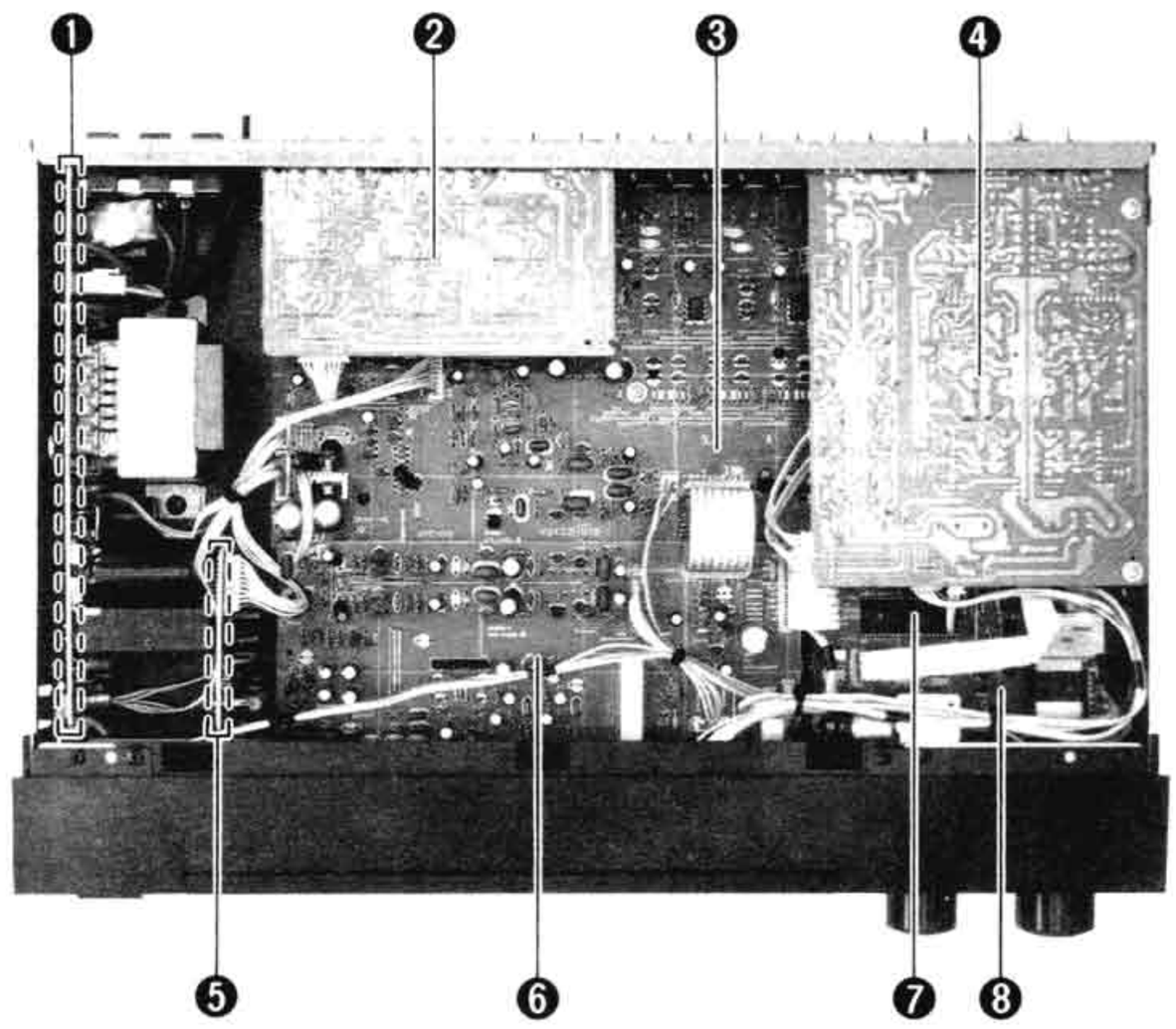

❶ EQUALIZER P.C.B. ASS'Y (1)
❷ EQUALIZER P.C.B. ASS'Y (3)
❸ MAIN P.C.B. ASS'Y (1)
❹ EQUALIZER P.C.B. ASS'Y (2)
❺ EQUALIZER P.C.B. ASS'Y (4)
❻ MAIN P.C.B. ASS'Y (2)
❼ μ-COM (IC11 : LC66304A)
❽ MAIN P.C.B. ASS'Y (3)

Precautions for Replacement of input Selector Switch

Make sure to perform initial setting of the input selector switch after its replacement.

• How to perform initial setting
Position the selector switch at the mid-point between the CD position and TUNER position and turn ON the POWER switch. Then the SELECTOR switch turns automatically until it finally stops at the "CD" position.

■ DISASSEMBLY PROCEDURES

(Remove parts in the order as numbered.)

1. Removal of Top Cover
Remove 6 screws (①).

2. Removal of Front Panel
a. Remove 7 knobs.
b. Remove 7 screws (②).

3. Removal of Main P.C.B. (1)
a. Remove 22 screws (③) and then remove the Rear Panel with the Equalizer P.C.B. (3).
b. Remove 2 screws (④) and then remove the Equalizer P.C.B. (2).
c. Remove 3 screws (⑤) and then remove the Main P.C.B. (1).

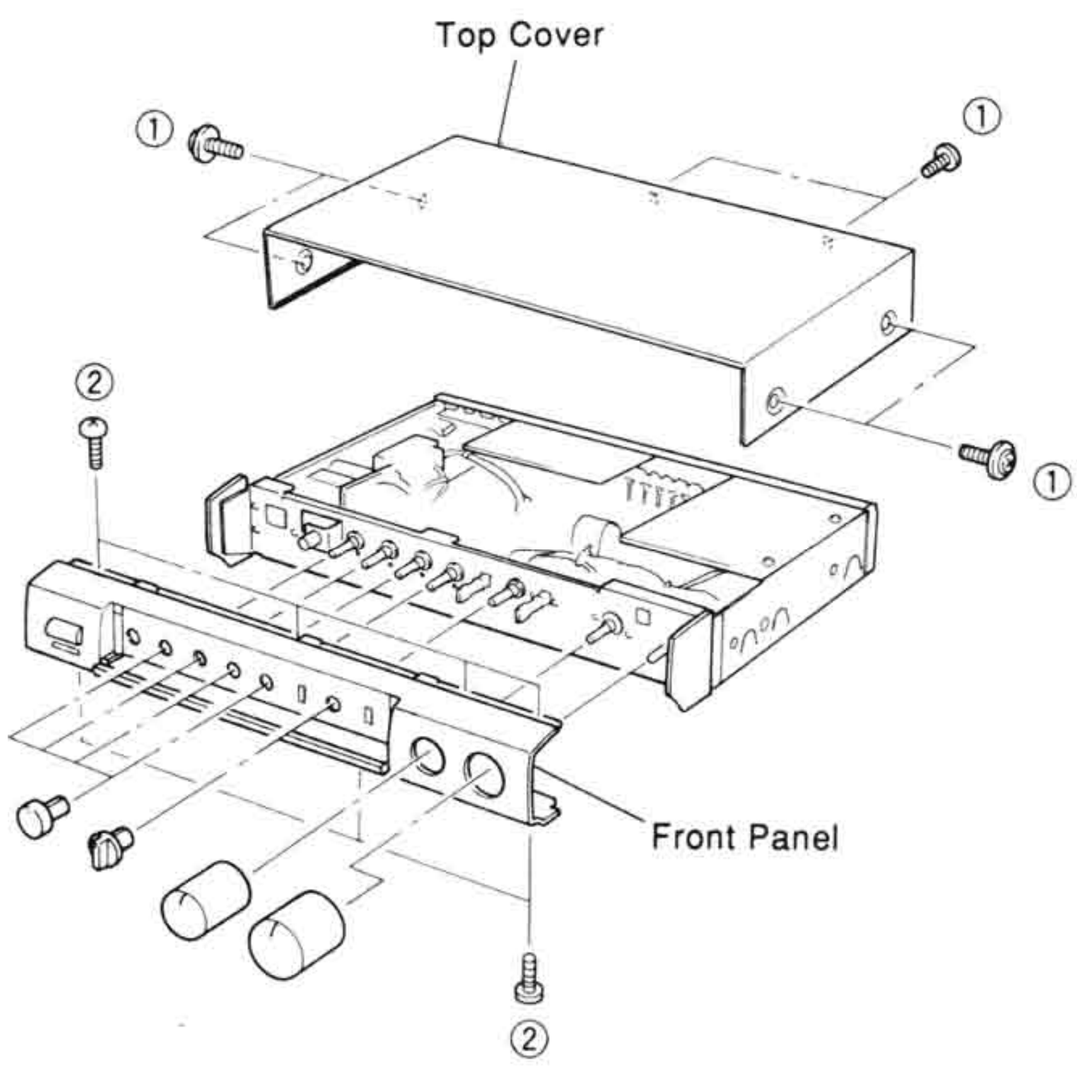

Fig. 1

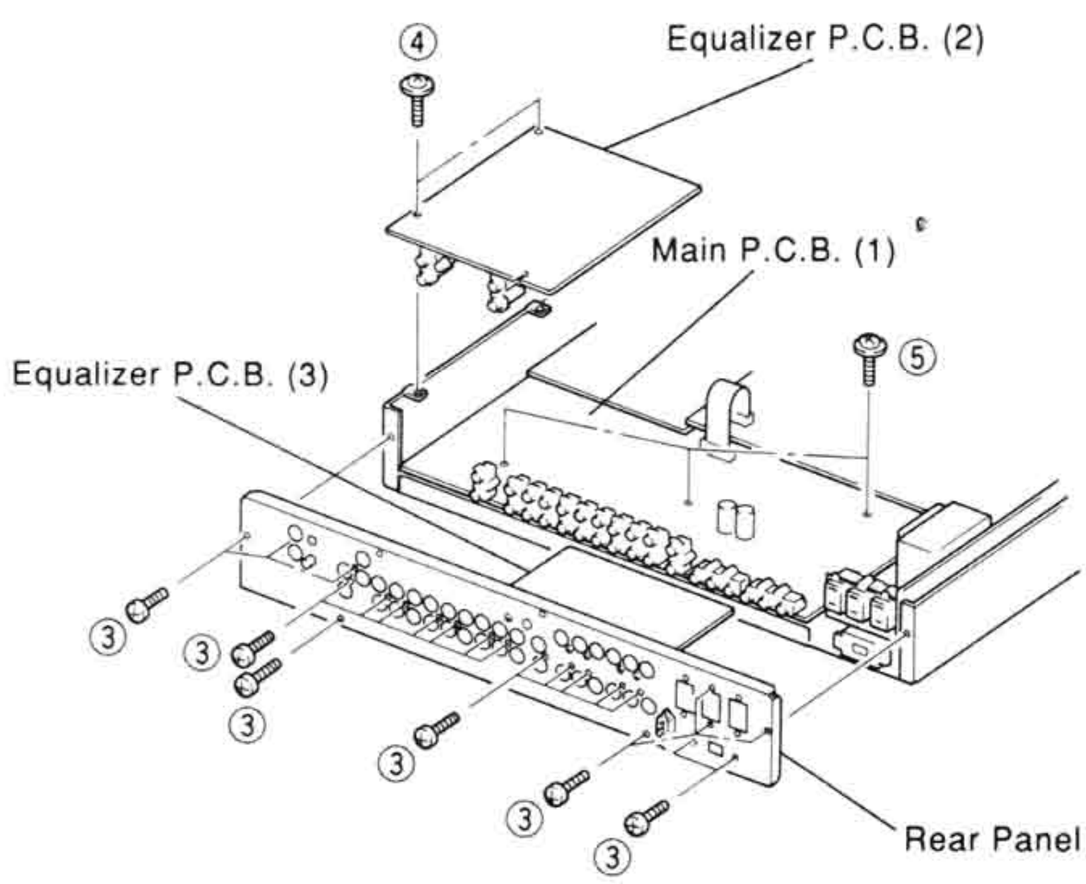

U, C models : ③ x 20
R, G models : ③ x 22
A, B models : ③ x 19

Fig. 2

■ PRINTED CIRCUIT BOARD (Foil Side)

EQUALIZER P. C. B. (2)

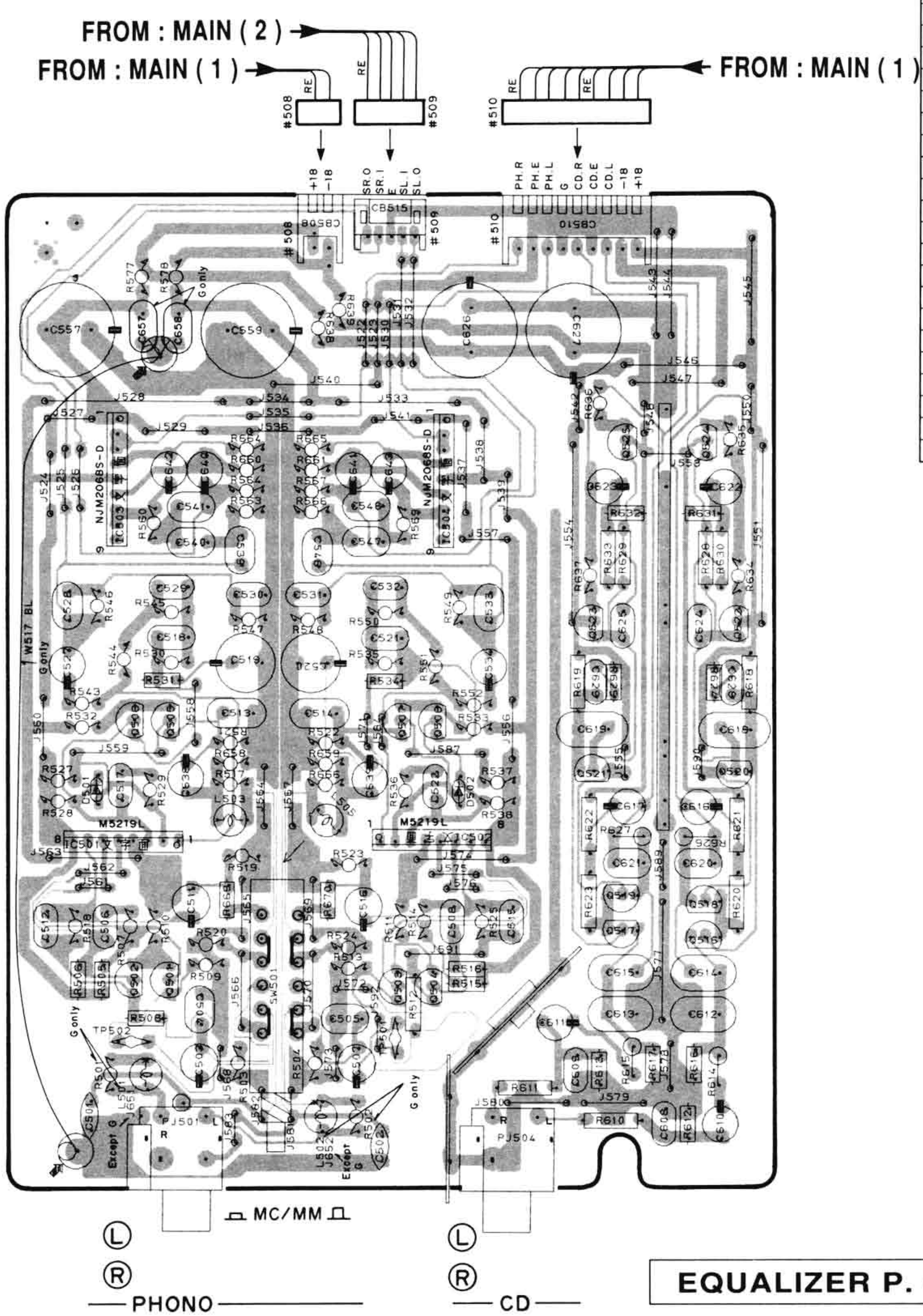

● Semiconductor Location

Ref. No.	Location
IC 501	A5
IC 502	C4
IC 503	A3
IC 504	C3
Q 501	B5
Q 502	A5
Q 503	B5
Q 504	C5
Q 505	B4
Q 506	A4
Q 507	B4
Q 508	C4
Q 516	D5
Q 517	C5
Q 518	D5
Q 519	C5
Q 520	D4
Q 521	C4
Q 522	D4
Q 523	C4
Q 524	D3
Q 525	C3

EQUALIZER P. C. B. (7)

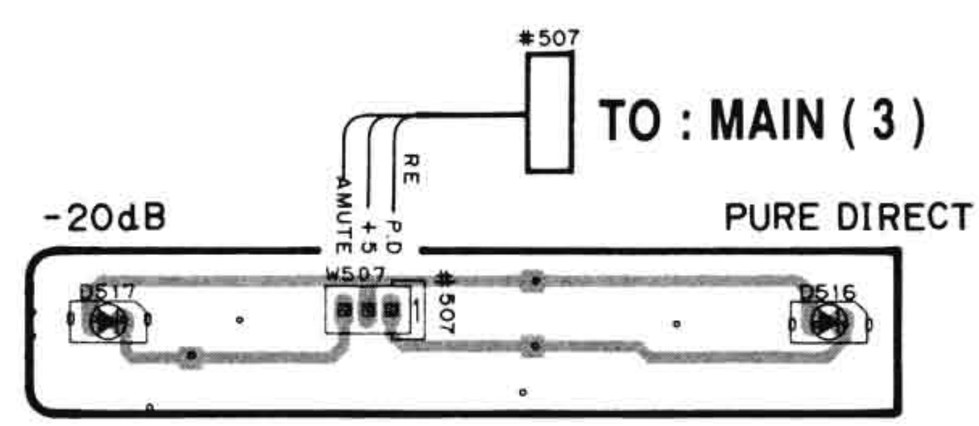

■ PRINTED CIRCUIT BOARD (Foil Side)

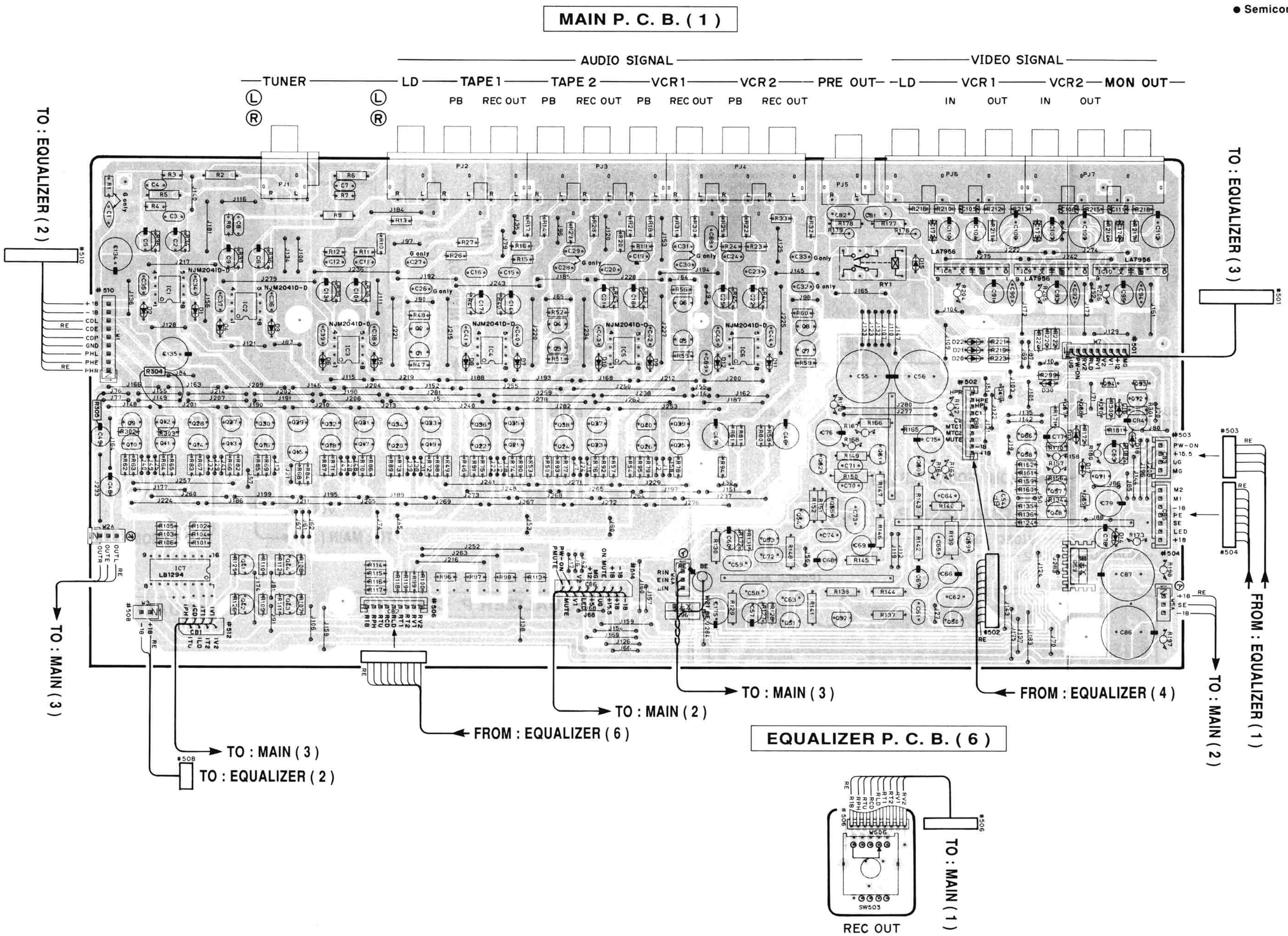

● Semiconductor Location

Ref. No.	Location
IC 1	B3
IC 2	B3
IC 3	B3
IC 4	C3
IC 5	D3
IC 6	E3
IC 7	B4
IC 8	F2
IC 9	F2
IC 10	G2
Q 1	C3
Q 2	C3
Q 3	D3
Q 4	D3
Q 5	D3
Q 6	D3
Q 7	E3
Q 8	E3
Q 9	A3
Q 10	A3
Q 11	B3
Q 12	B3
Q 13	B3
Q 14	B3
Q 15	B3
Q 16	B3
Q 17	C3
Q 18	B3
Q 19	C3
Q 20	C3
Q 21	C3
Q 22	C3
Q 23	D3
Q 24	D3
Q 25	D3
Q 26	D3
Q 27	B3
Q 28	B3
Q 29	B3
Q 30	B3
Q 31	C3
Q 32	B3
Q 33	C3
Q 34	C3
Q 35	C3
Q 36	C3
Q 37	D3
Q 38	D3
Q 39	D3
Q 40	D3
Q 41	B4
Q 42	B4
Q 43	B4
Q 44	B4
Q 48	F4
Q 49	F3
Q 50	F4
Q 51	E4
Q 52	E4
Q 53	E4
Q 54	E4
Q 55	E4
Q 57	F4
Q 58	F3
Q 59	F4
Q 60	E3
Q 61	E3
Q 62	E3
Q 65	F4
Q 66	F3
Q 67	F3
Q 68	F3
Q 69	F4
Q 70	F3
Q 71	F4
Q 72	G3
Q 93	G3
Q 94	F3
Q 96	D4

■ PRINTED CIRCUIT BOARD (Foil Side)

① : TEST POINT WAVEFORMS (See page 16)

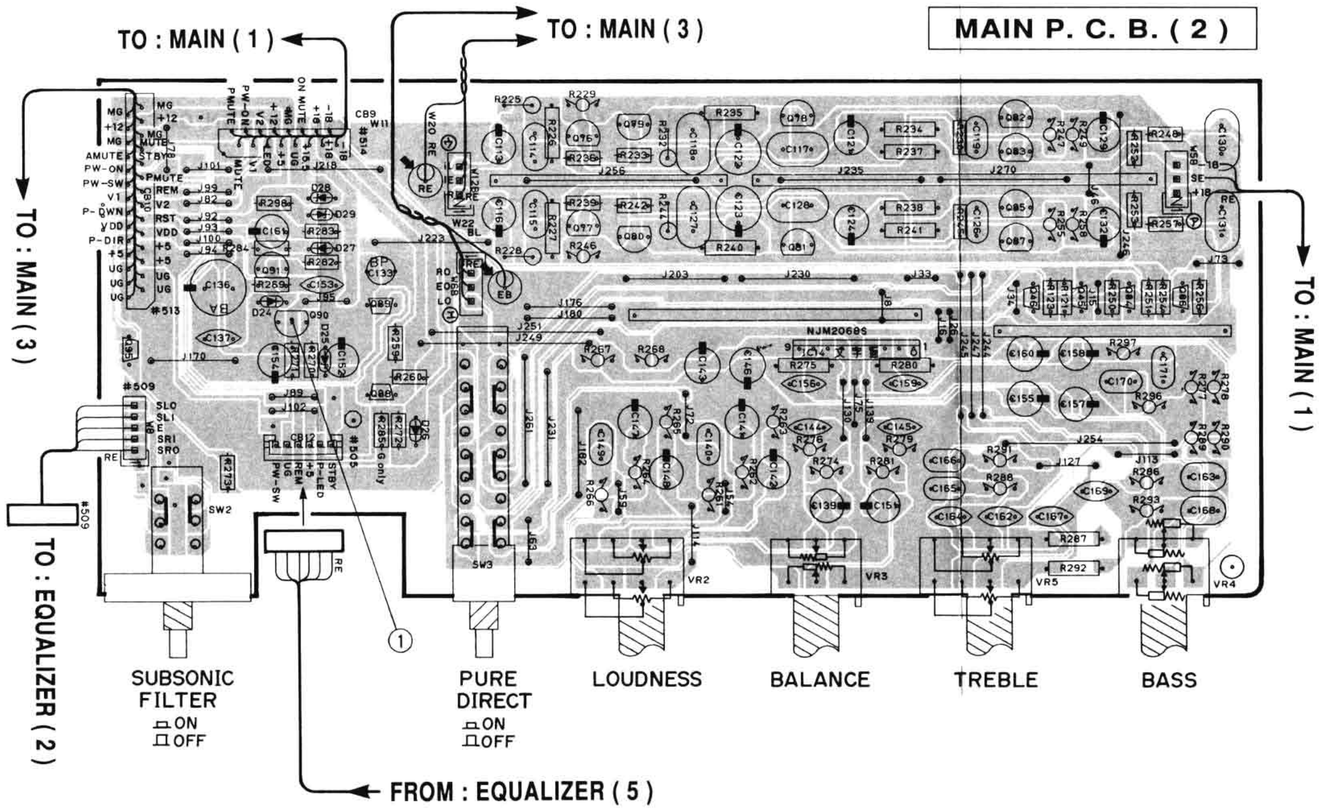

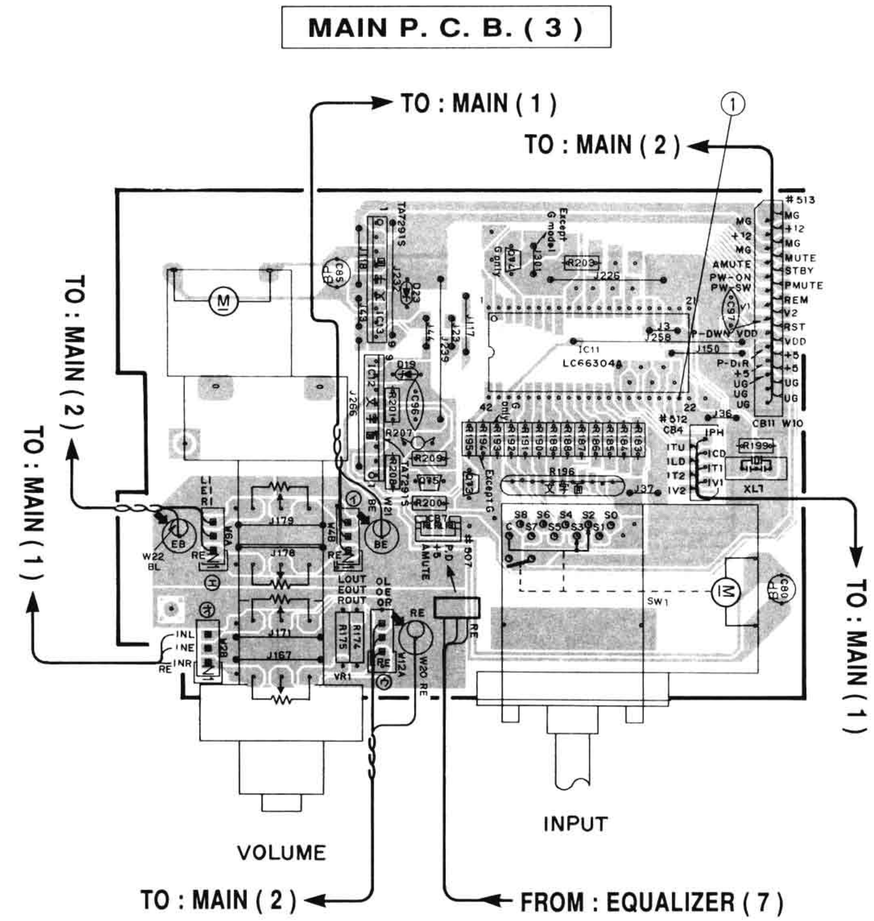

● Semiconductor Location

Ref. No.	Location
IC 11	G2
IC 12	G2
IC 13	G2
IC 14	D2
IC 505	D5
IC 506	C5
IC 507	B5
IC 508	D5
IC 509	C5
IC 510	B5
IC 512	F5
Q 45	E2
Q 46	E2
Q 73	G3
Q 74	G2
Q 75	G3
Q 76	C1
Q 77	C2
Q 78	D1
Q 79	C1
Q 80	C2
Q 81	D2
Q 82	E1
Q 83	E2
Q 84	E2
Q 85	E2
Q 86	E2
Q 87	E2
Q 88	C2
Q 89	C2
Q 90	B2
Q 91	B2
Q 95	B2
Q 526	F5
Q 527	F5
Q 528	F5
Q 529	F5
Q 530	F5
Q 531	F5

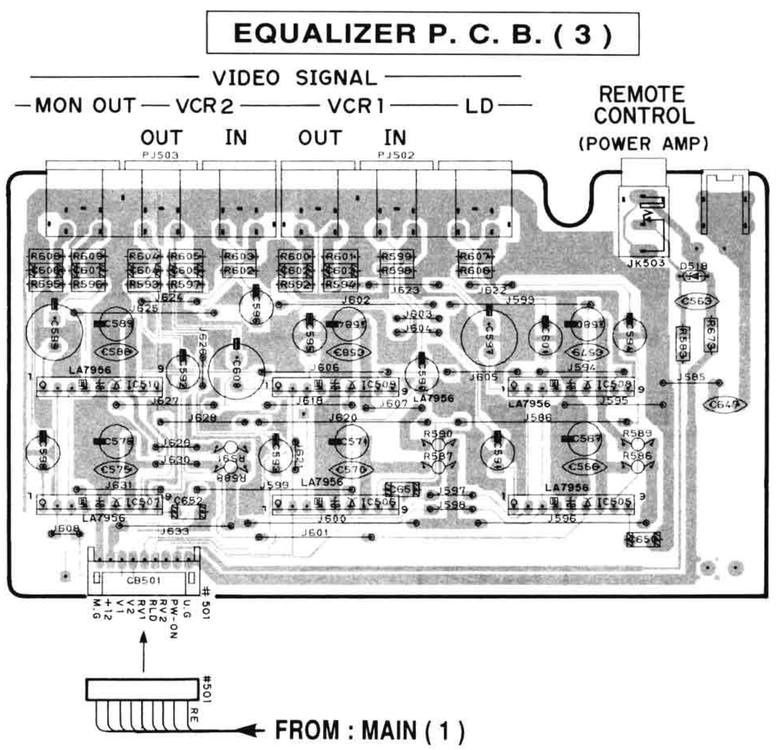

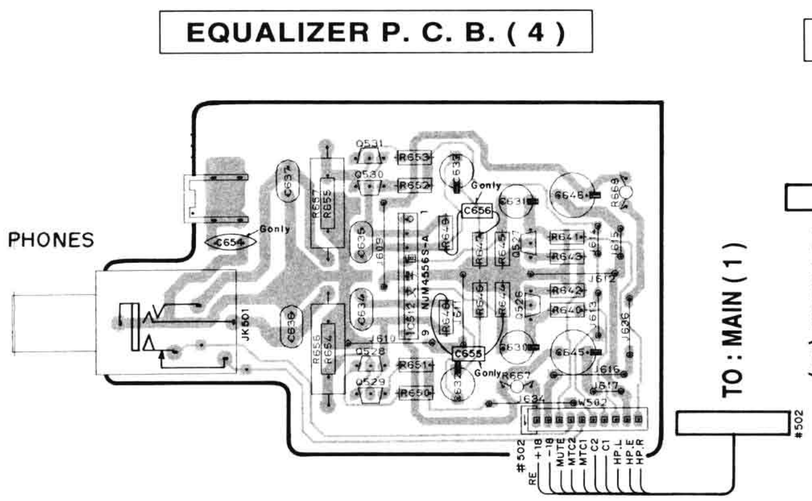

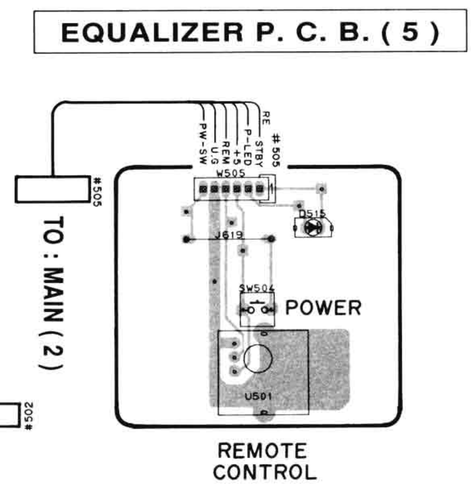

■ PRINTED CIRCUIT BOARD (Foil Side)

● U, C models

EQUALIZER P. C. B. (1)

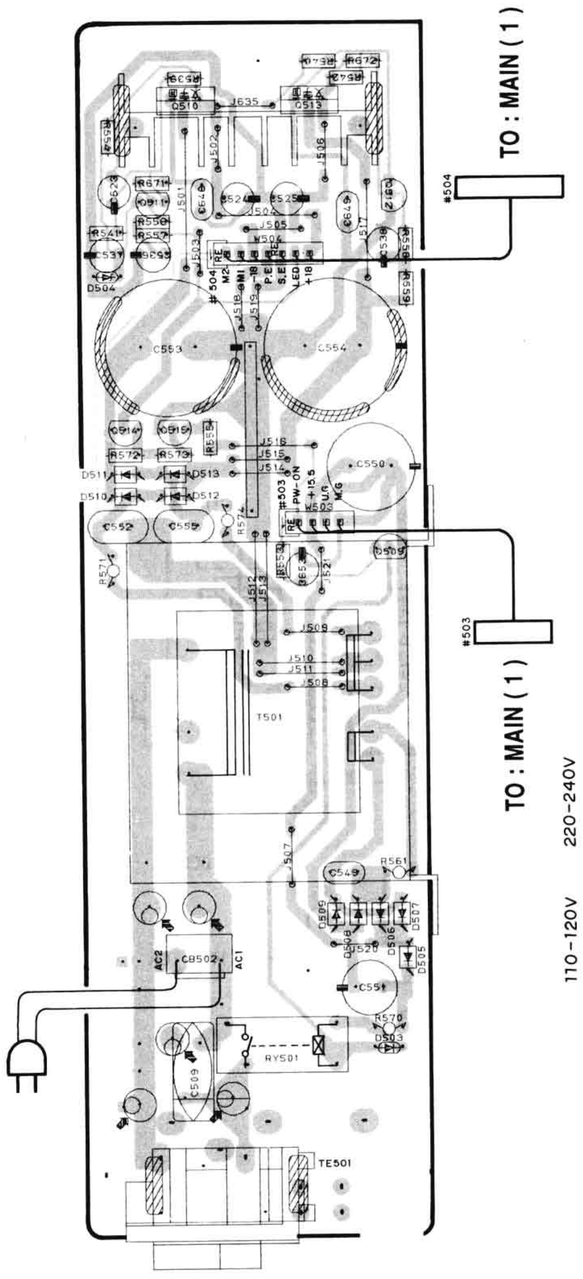

● R model

EQUALIZER P. C. B. (1)

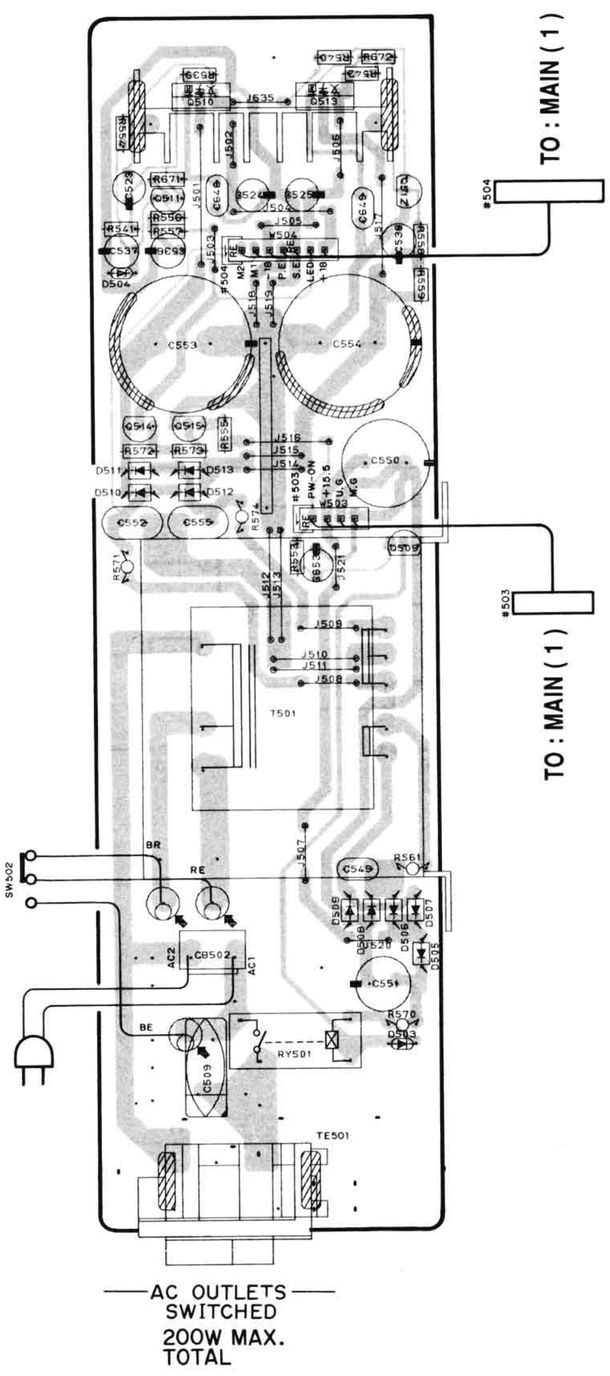

● G model

EQUALIZER P. C. B. (1)

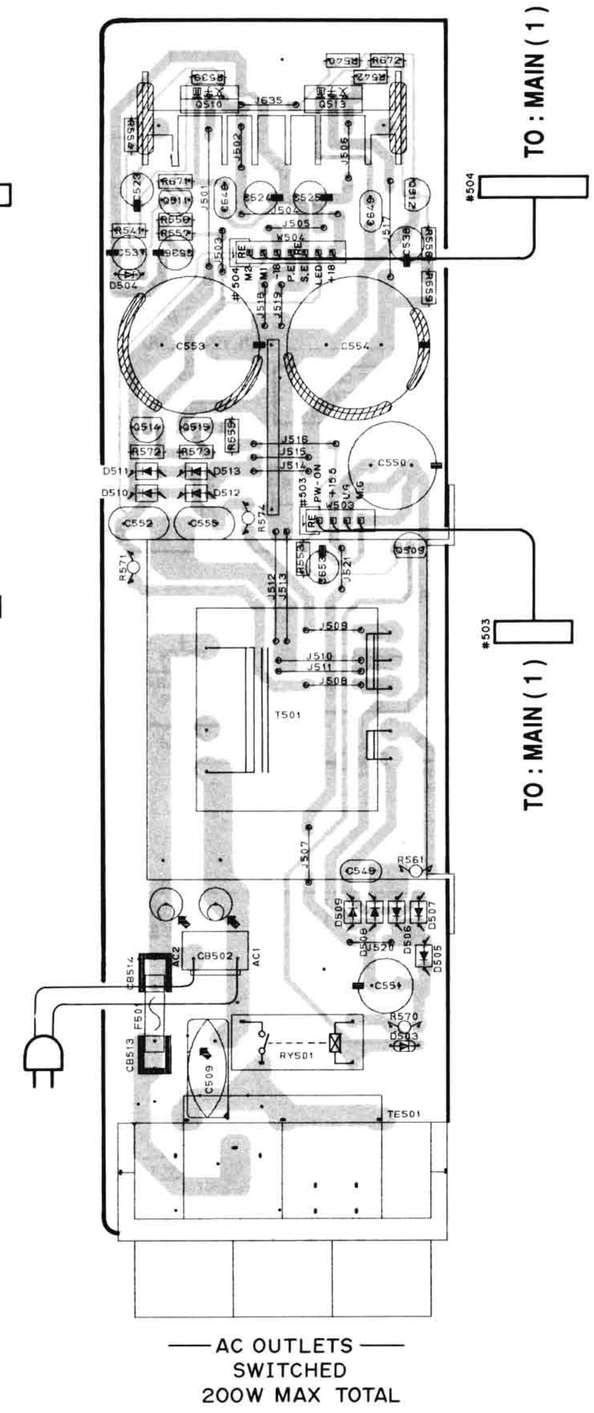

● A, B models

EQUALIZER P. C. B. (1)

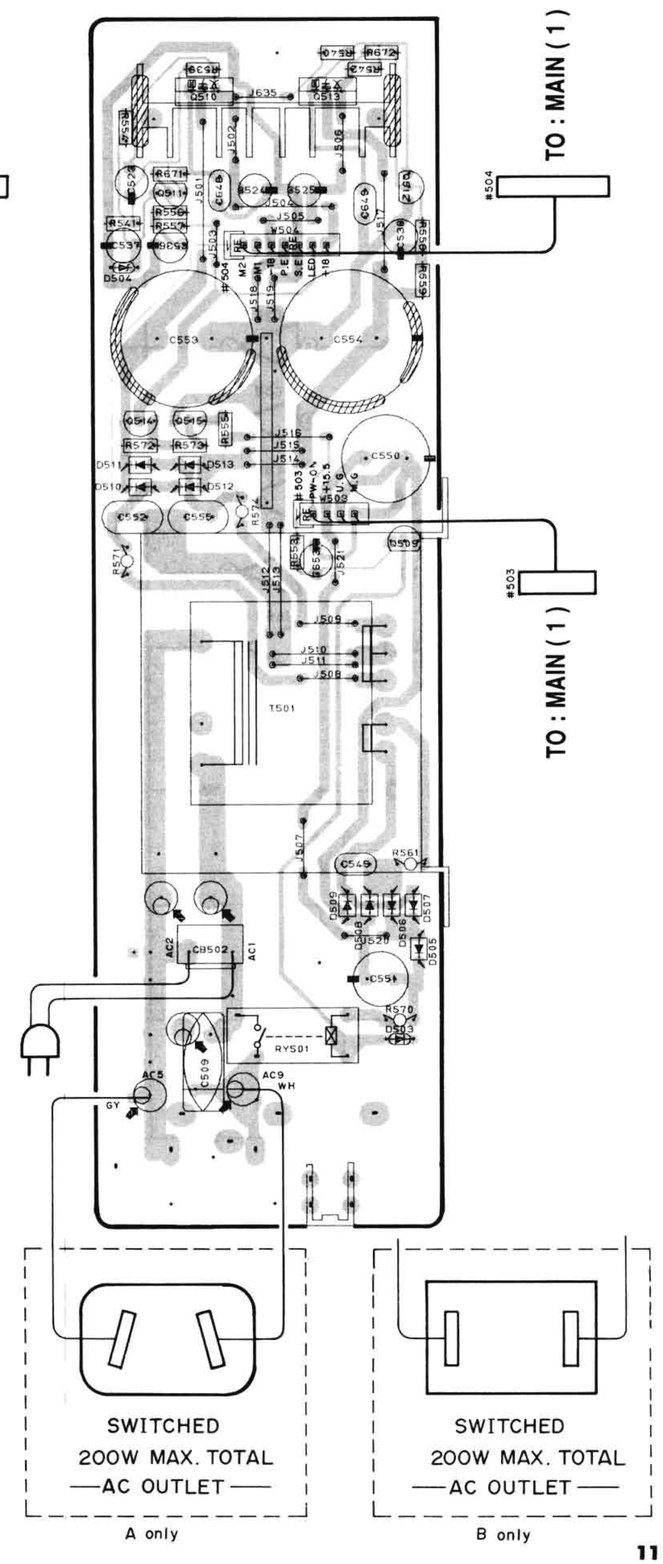

■ BLOCK DIAGRAM

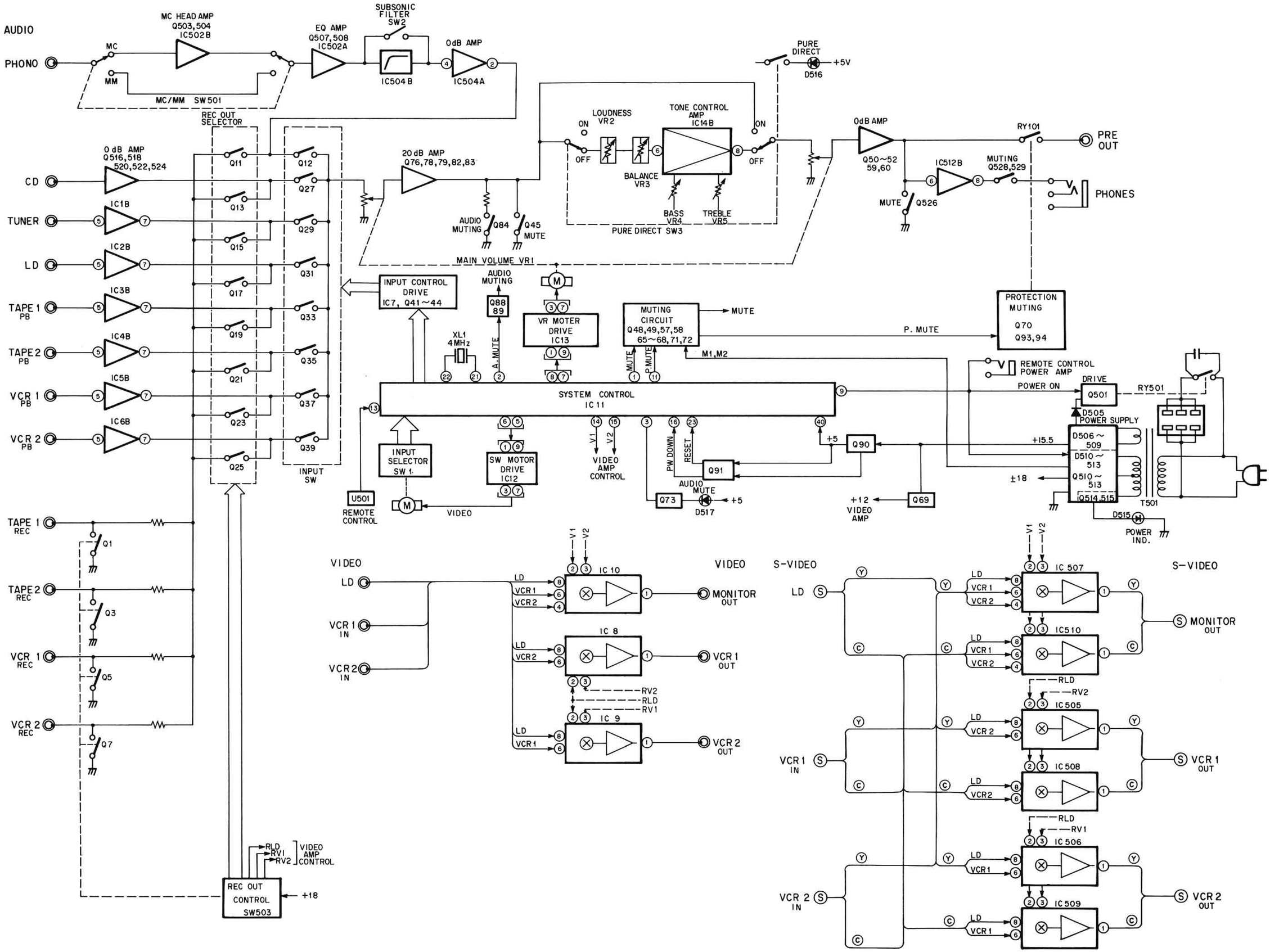

■ μ-COM DATA

IC11 : LC66304A
4bit μ-COM

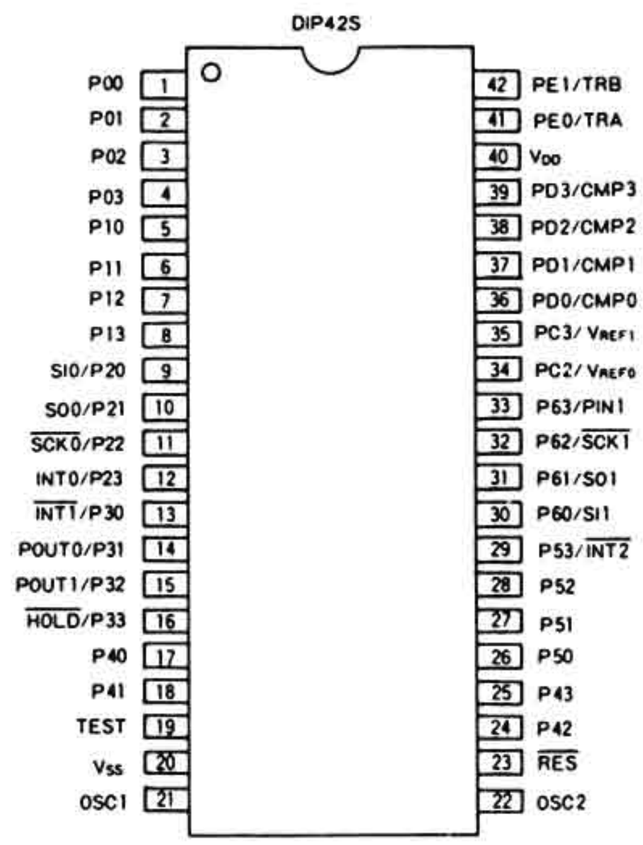

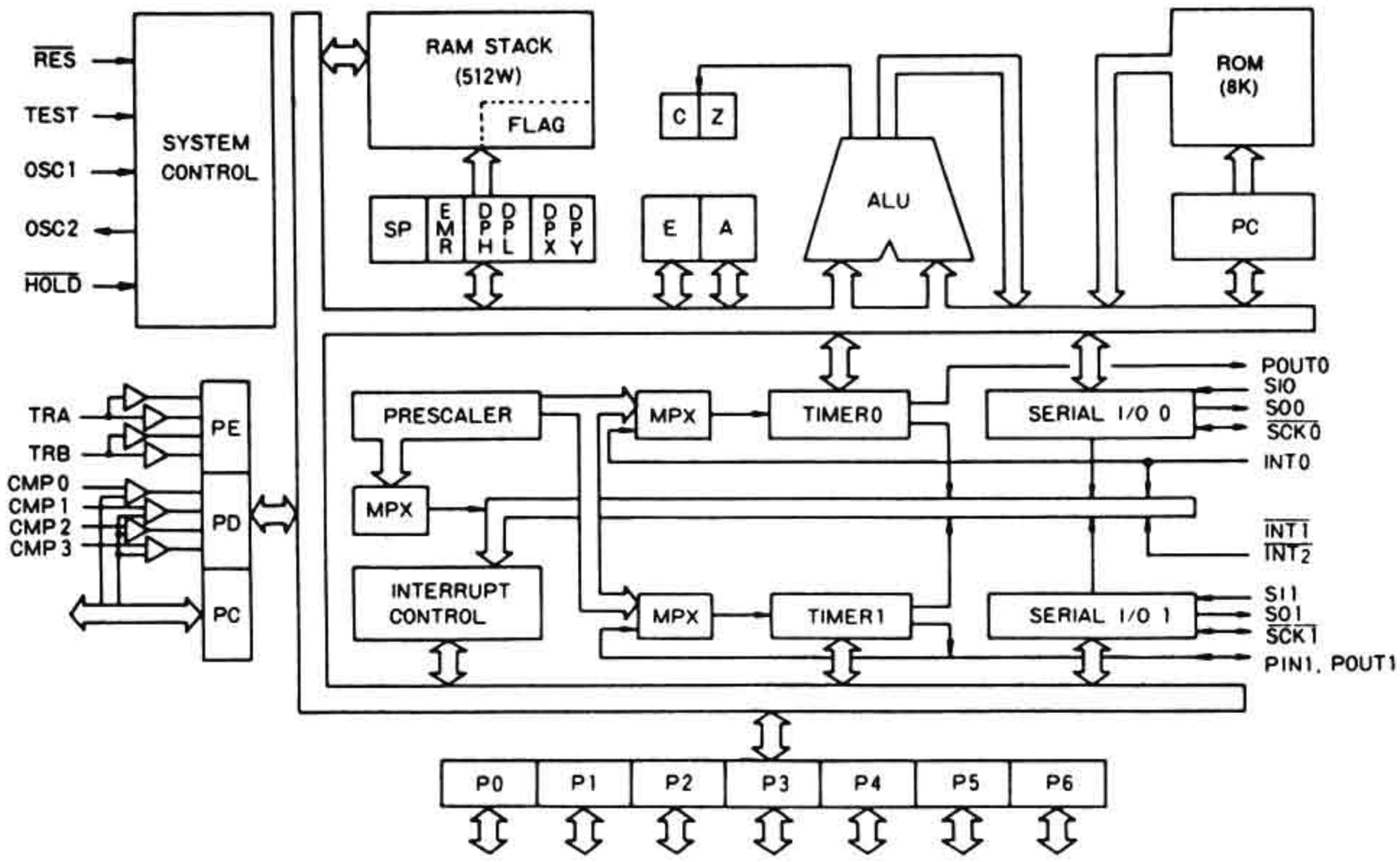

No.	PORT	I/O	NAME	FUNCTION	
1	P00	O	MUTE	Mute	
2	P01	O	AMUTE	Audio Mute	
3	P02	O	AMLED	Audio Mute LED	
4	P03	O	STBY	Standby LED	
5	P10	O	IN+	Input Selector	Turn Right
6	P11	O	IN–		Turn Left
7	P12	O	VOL+	Main Volume	Up
8	P13	O	VOL–		Down
9	SI0/P20	O	PW-ON	Main Relay ON (POWER ON/OFF)	
10	SO0/P21			N. C.	
11	SCK0/P22	O	PMUTE	Power Mute	
12	INT0/P23	I	PWSW	Power SW	
13	INT1/P30	I	REM	Remote Control	
14	POUT0/P31	O	VCON1	Video Select	VCR1
15	POUT1/P32	O	VCON2		VCR2
16	HOLD/P33	I	PWDN	Power Down Detect	
17	P40	O	T1	Function Select	TAPE 1
18	P41	O	T2		TAPE 2
19	TEST			GND	
20	VSS			GND	
21	OSC1	I		Clock (4MHz)	

No.	PORT	I/O	NAME	FUNCTION	
22	OSC2	O		Clock (4MHz)	
23	RES	I	RES	Reset Input	
24	P42	O	VCR1	Function Select	VCR1
25	P43	O	VCR2		VCR2
26	P50	O	PHONO		PHONO
27	P51	O	TUNER		TUNER
28	P52	O	CD		CD
29	P53/INT2	O	LD		LD
30	P60/SI1	I	S0	Input Selector Position Detect	
31	P61/SO1	I	S1		
32	P62/SCK1	I	S2		
33	P63/PIN1	I	S3		
34	PC2/VREF0	I	S8		
35	PC3/VREF1	I	CAM	Cam Position Detect	
36	PD0/CMP0	I	S4	Input Selector Position Detect	
37	PD1/CMP1	I	S5		
38	PD2/CMP2	I	S6		
39	PD3/CMP3	I	S7		
40	VDD			+5V	
41	PE0/TRA	I	NOT-G	Market Detect H : G L : Not G	
42	PE1/TRB	I	IN8	Model Detect H : CX-1 L : CX-2	

■ IC BLOCK

IC1~6 : NJM2041D-D
Dual OP-Amp

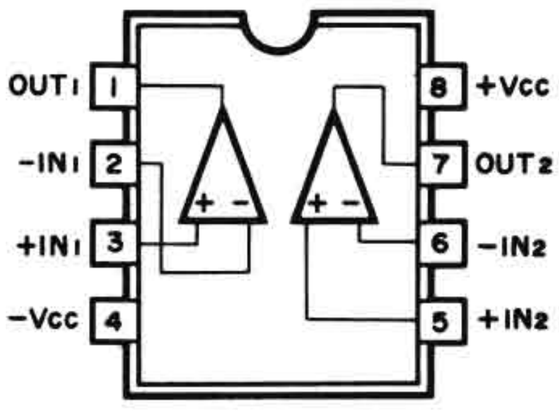

IC14 : NJM2068S
IC512 : NJM4556S-A
IC503, 504 : NJM2068S-D
Dual OP-Amp

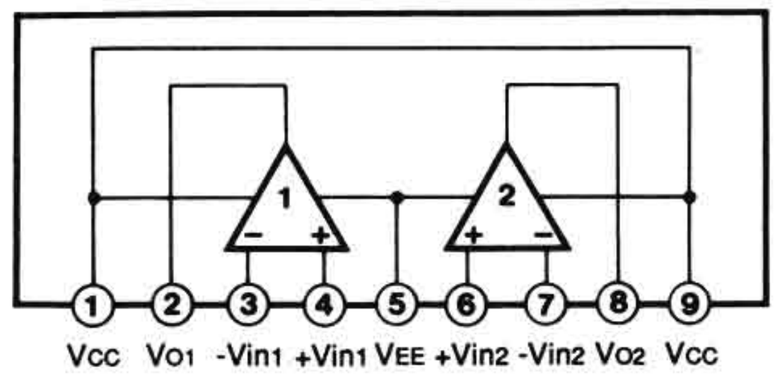

IC501, 502 : M5219L
Dual OP-Amp

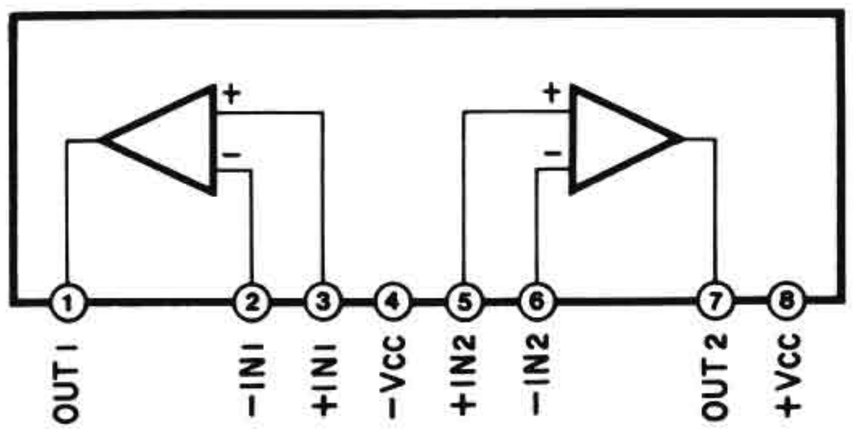

IC7 : LB1294
Driver Array

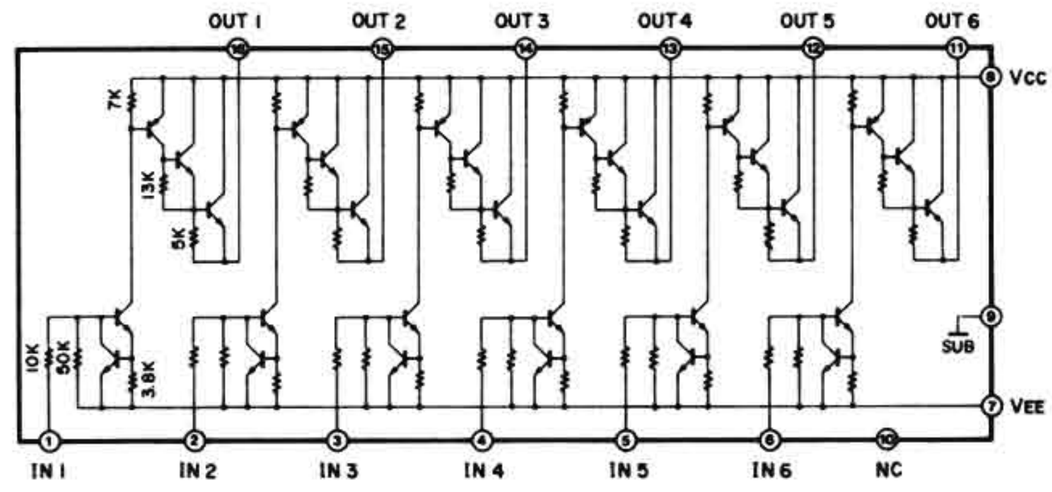

IC8~10, 505~510 : LA7956
Video Amp Selector

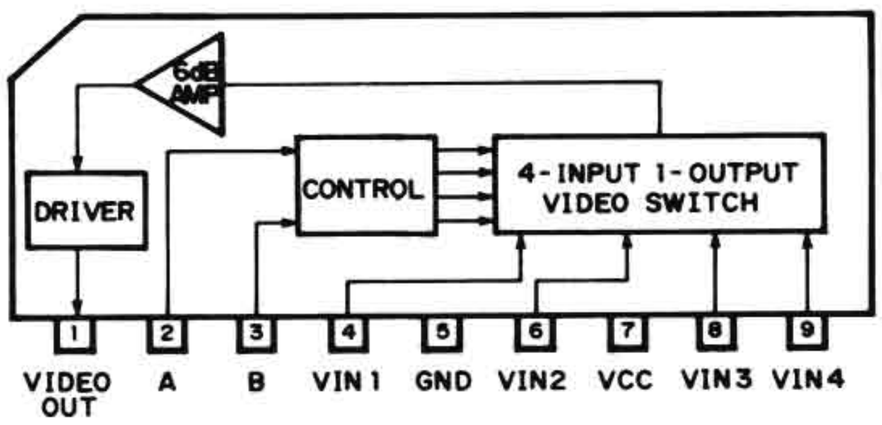

S2 (2 pin)	S3 (3 pin)	VIN1 (4 pin)	VIN2 (6 pin)	VIN3 (8 pin)	VIN4 (9 pin)
H	H	ON	OFF	OFF	OFF
L	H	OFF	ON	OFF	OFF
H	L	OFF	OFF	ON	OFF
L	L	OFF	OFF	OFF	ON

IC12, 13 : TA7291S
Motor Driver

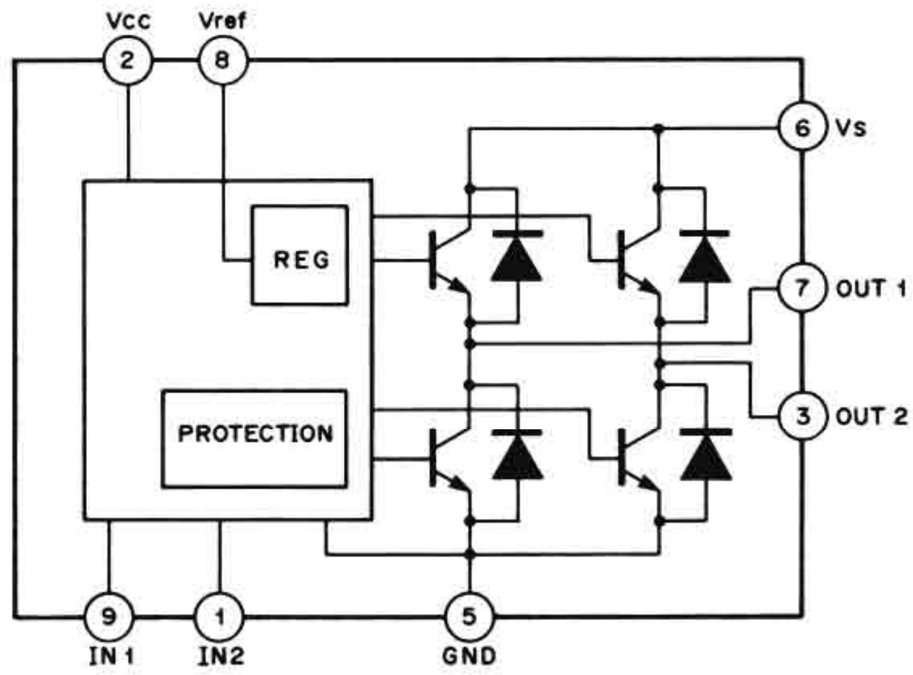

INPUT		OUTPUT		MODE
IN1	IN2	OUT1	OUT2	
0	0	∞	∞	STOP
1	0	H	L	CW/CCW
0	1	L	H	CCW/CW
1	1	L	L	BRAKE

■ SCHEMATIC DIAGRAM (MAIN)

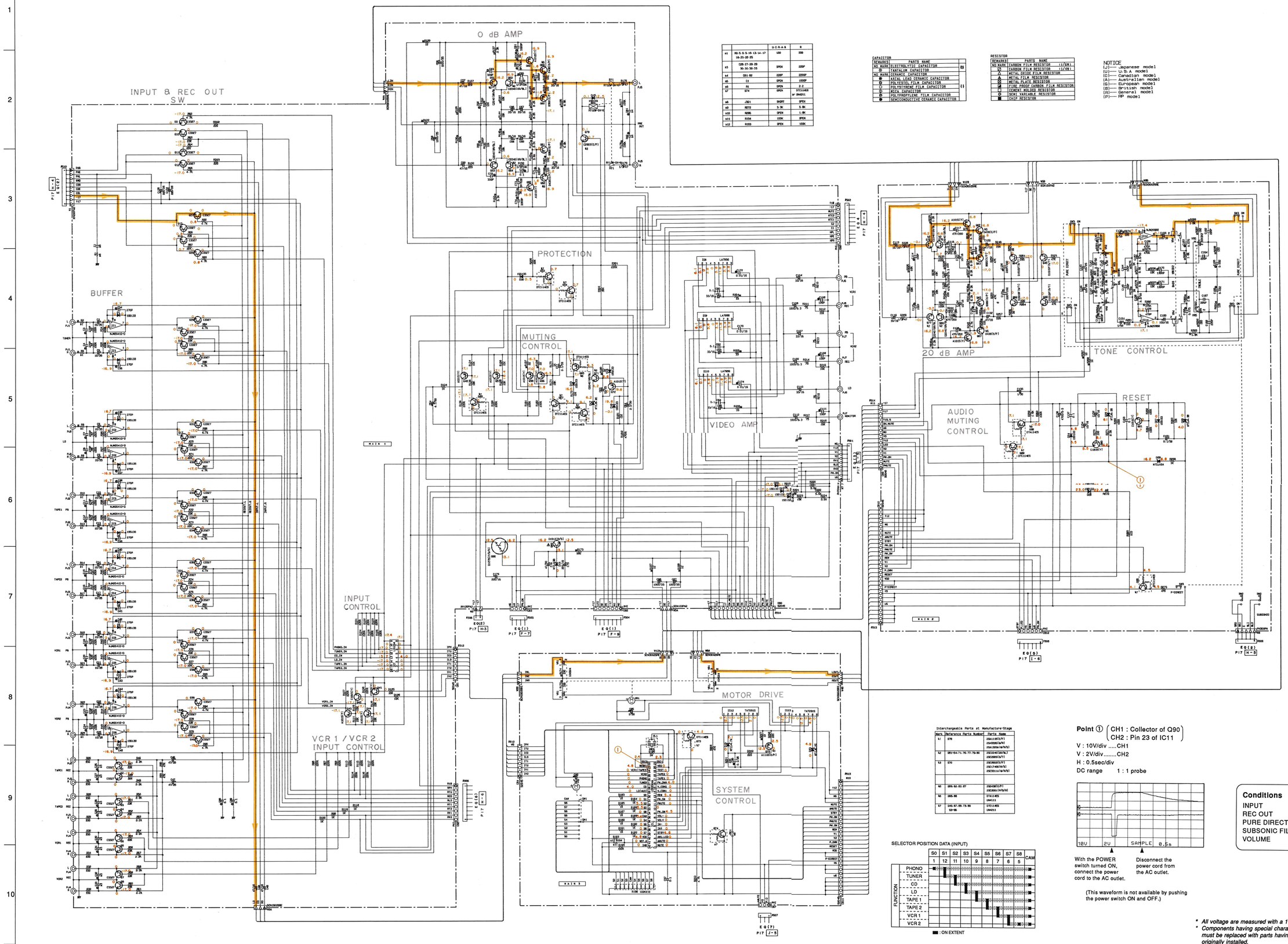

		D·C·R·A·S	R
x1	RD-S, S-15-13, L4-17 16-25-28-29	100	820
x3	CDS-27-30-29 36-34-38-35	OPEN	220P
x4	CDS-82	220P	2200P
x5	C1	OPEN	1000P
x6	R1	OPEN	2.2
x7	D74	OPEN	DTC114ES or 1N4151
x8	JS01	SHORT	OPEN
x9	R272	3.3K	5.6K
x10	R285	OPEN	1.8K
x11	R154	100K	OPEN
x12	R153	OPEN	150K

CAPACITOR

REMARKS	PARTS NAME
NO MARK	ELECTROLYTIC CAPACITOR
●	TANTALUM CAPACITOR
NO MARK	CERAMIC CAPACITOR
●	AXIAL LEAD CERAMIC CAPACITOR
⊖	POLYESTER FILM CAPACITOR
○	POLYSTYRENE FILM CAPACITOR
◇	MICA CAPACITOR
◐	POLYPROPYLENE FILM CAPACITOR
◑	SEMICONDUCTIVE CERAMIC CAPACITOR

RESISTOR

REMARKS	PARTS NAME
NO MARK	CARBON FILM RESISTOR (1/6W)
◇	CARBON FILM RESISTOR (1/4W)
△	METAL OXIDE FILM RESISTOR
△	METAL FILM RESISTOR
◇	METAL PLATE RESISTOR
◪	FINE PROOF CARBON FILM RESISTOR
□	CEMENT MOLDED RESISTOR
◇	SEMI VARIABLE RESISTOR
■	CHIP RESISTOR

NOTICE
(J)····· Japanese model
(U)····· U.S.A model
(C)····· Canadian model
(A)····· Australian model
(G)····· European model
(B)····· British model
(H)····· General model
(P)····· RP model

PIN CONNECTION DIAGRAM OF TRANSISTORS, DIODES AND ICS.

2SA1015 (Y)
2SC1815 (Y)
2SC2240 (GR, BL)
2SB560 (E, F)
2SC2909 (S, T)
2SD438 (E, F)
2SC2061 (F, Q, R)
2SD1915 (P) S, T

DTA114ES
DTC114ES
UN4111-(TA)
UN4211-(TA)
2SA1115 (E, F)
2SA933S (Q, R)
2SA1309A (Q, R, S)
2SC2603 (E, F)
2SC1740S (R, S)
2SC3311A (Q, R, S)
2SC3327 (A, B)

2SD1913 (R, S)

1SS133
MTZJ4.3B
MTZJ4.7A
MTZJ6.2B
MTZJ6.2C
MTZJ10.0A
MTZJ13.0B

NJM2041D-D

NJM2068S
LA7956

TA7211S

LB1294

LC66304A

Interchangeable Parts at Manufacture-Stage

Mark	Reference Parts Number	Parts Name
k1	D78	1SS111EC(F/T) 2SA1020LS(R/S) 2SA1309A(R/S/T)
k2	Q81-84-71-76-77-79-80	2SC1740S(R/S) 2SC2603(E/F)
k3	D70	2SC9033E(F/T) 2SC1740S(R/S) 2SC3311A(R/S)
k5	D55-52-82-87	2SD438T(F/T) 2SC9033(R/S)
k6	D85-88	DTA114ES UN4111
k7	D45-47-89-73-90 93-95	DTC114ES UN4211

SELECTOR POSITION DATA (INPUT)

	S0	S1	S2	S3	S4	S5	S6	S7	S8	CAM
	1	12	11	10	9	8	7	6	5	
FUNCTION: PHONO	■									■
TUNER		■								■
CD			■							■
LD				■						■
TAPE 1					■					■
TAPE 2						■				■
VCR 1							■			■
VCR 2								■		■

■ : ON EXTENT

Point ① (CH1 : Collector of Q90 / CH2 : Pin 23 of IC11)
V : 10V/div CH1
V : 2V/div CH2
H : 0.5sec/div
DC range 1 : 1 probe

With the POWER switch turned ON, connect the power cord to the AC outlet.

Disconnect the power cord from the AC outlet.

(This waveform is not available by pushing the power switch ON and OFF.)

Conditions

INPUT	→ CD
REC OUT	→ CD
PURE DIRECT	→ OFF
SUBSONIC FILTER	→ OFF
VOLUME	→ minimum (∞)

** All voltage are measured with a 10MΩ/V DC electric volt meter.*
** Components having special characteristics are marked ⚠ and must be replaced with parts having specifications equal to those originally installed.*
** Schematic diagram is subject to change without notice.*

■ SCHEMATIC DIAGRAM (EQUALIZER)

CAPACITOR

REMARKS	PARTS NAME	
NO MARK	ELECTROLYTIC CAPACITOR	
⊗	TANTALUM CAPACITOR	
NO MARK	CERAMIC CAPACITOR	
◉	AXIAL LEAD CERAMIC CAPACITOR	
◎	POLYESTEL FILM CAPACITOR	
○	POLYSTYRENE FILM CAPACITOR	
⊙	MICA CAPACITOR	
⊚	POLYPROPYLENE FILM CAPACITOR	
●	SEMICONDUCTIVE CERAMIC CAPACITOR	

RESISTOR

REMARKS	PARTS NAME
NO MARK	CARBON FILM RESISTOR (1/6W)
☑	CARBON FILM RESISTOR (1/4W)
△	METAL OXIDE FILM RESISTOR
▲	METAL FILM RESISTOR
⊠	METAL PLATE RESISTOR
◪	FIRE PROOF CARBON FILM RESISTOR
□	CEMENT MOLDED RESISTOR
⊘	SEMI VARIABLE RESISTOR
■	CHIP RESISTOR

NOTICE
(J)····· Japanese model
(U)····· U.S.A model
(C)····· Canadian model
(A)····· Australian model
(G)····· European model
(B)····· British model
(A)····· General model
(P)····· RP model

Interchangeable Parts at Manufacture-Stage

Mark	Reference Parts Number	Parts Name
k1	U501	GP1U501X GP1U571X
k2	RY501	DG12D1-01W1 G5P-1
k3	Q516-519	2SC2240(GR/BL) 2SC2909(S/T)
k4		
k5	Q522-523	2SD438(E/F) 2SC2061(P/Q/R)

		U.C	R	A.B	G
m1					
m2	TE501	V132750	V132750	X	VP72860
m3					
m4	C513-514	220P/100	220P/100	220P/100	330P/100
m5	C504-505	0.01	0.01	0.01	0.018
m6	R517-566	220	220	220	2.2K
m7	R501-502	X	X	X	1K
m8	L501-502	SHORT	SHORT	SHORT	15μH
m9	T501	XM223	XM224	XM225	XM226
m10	F501	X	X	X	2.5A250V
m11	D513-514	X	X	X	VP20650
m12	J651-652	○	○	○	X
m13					
m14					

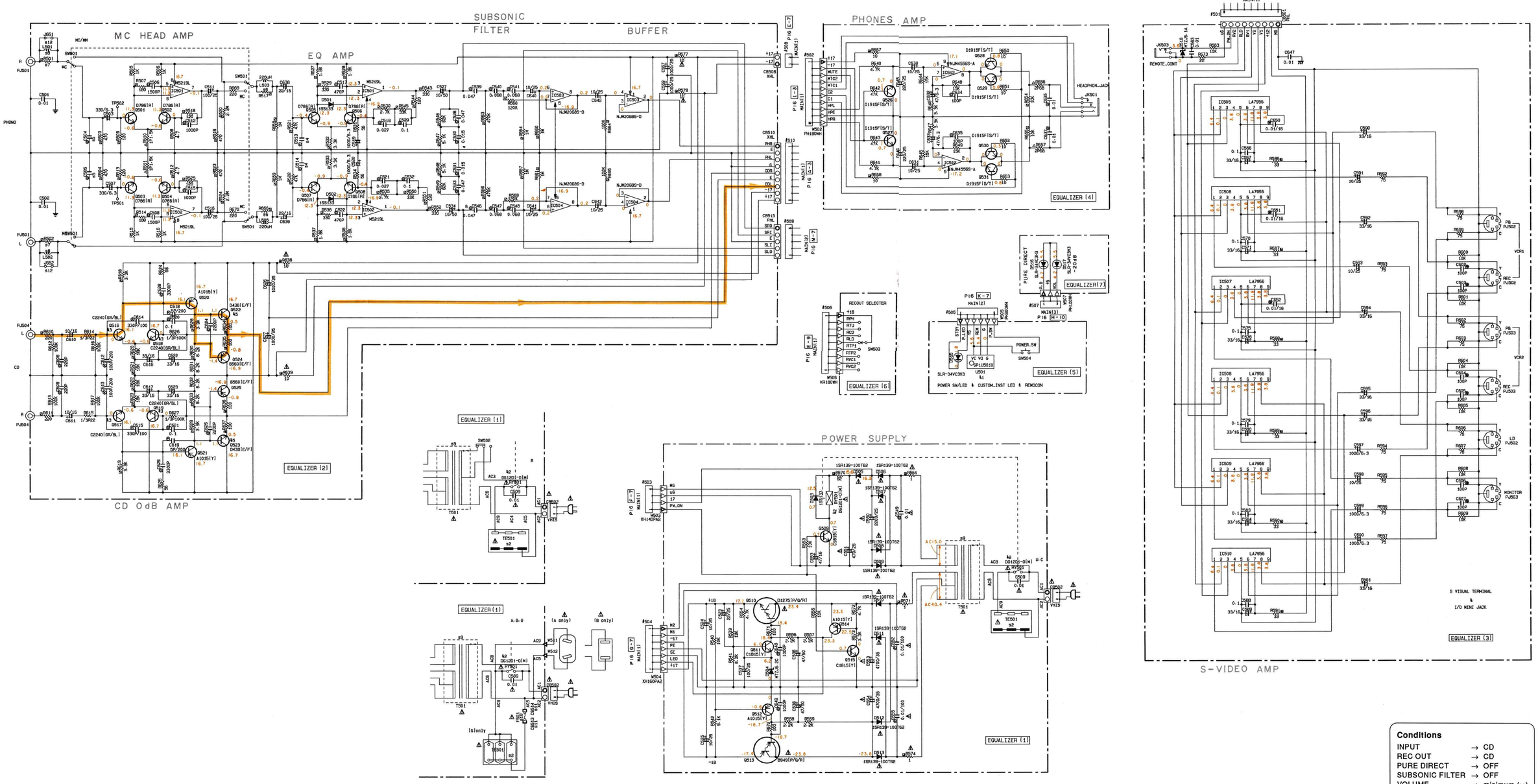

Conditions

INPUT	→	CD
REC OUT	→	CD
PURE DIRECT	→	OFF
SUBSONIC FILTER	→	OFF
VOLUME	→	minimum (∞)

PIN CONNECTION DIAGRAM OF TRANSISTORS, DIODES AND ICS.

2SA1015 (Y) 2SB560 (E, F) 2SC1815 (Y) 2SC2240 (GR, BL) 2SD438 (E, F) 2SC2909 (S, T) 2SC2061 (P, Q, R) 2SD1915 (F) S, T 2SD796 (R)	2SB949 (P, Q, R) 2SD1275 (P, Q, R)	1SS133 1SR139-100 MTZJ5.1A MTZJ6.2C	M5219L	NJM4556S-A NJM2068S-D LA7956

* All voltage are measured with a 10MΩ/V DC electric volt meter.
* Components having special characteristics are marked ⚠ and must be replaced with parts having specifications equal to those originally installed.
* Schematic diagram is subject to change without notice.

PARTS LIST

■ ELECTRICAL PARTS

■ **WARNING**
Components having special characteristics are marked ⚠ and must be replaced with parts having specifications equal to those originally installed.

- Carbon resistors (1/6W or 1/4W) are not included in the ELECTRICAL PARTS List. For the parts No. of the carbon resistors, refer to last page.

ABBREVIATIONS IN THIS LIST ARE AS FOLLOWS :

C.A.EL.CHP	: CHIP ALUMI. ELECTROLYTIC CAP
C.CE	: CERAMIC CAP
C.CE.ARRAY	: CERAMIC CAP ARRAY
C.CE.CHP	: CHIP CERAMIC CAP
C.CE.ML	: MULTILAYER CERAMIC CAP
C.CE.M.CHP	: CHIP MULTILAYER CERAMIC CAP
C.CE.SAFTY	: RECOGNIZED CERAMIC CAP
C.CE.TUBLR	: CERAMIC TUBULAR CAP
C.CE.SMI	: SEMI CONDUCTIVE CERAMIC CAP
C.EL	: ELECTROLYTIC CAP
C.MICA	: MICA CAP
C.ML.FLM	: MULTILAYER FILM CAP
C.MP	: METALLIZED PAPER CAP
C.MYLAR	: MYLAR FILM CAP
C.MYLAR.ML	: MULTILAYER MYLAR FILM CAP
C.PAPER	: PAPER CAPACITOR
C.PLS	: POLYSTYRENE FILM CAP
C.POL	: POLYESTER FILM CAP
C.POLY	: POLYETHYLENE FILM CAP
C.PP	: POLYPROPYLENE FILM CAP
C.TNTL	: TANTALUM CAP
C.TNTL.CHP	: CHIP TANTALUM CAP
C.TRIM	: TRIMMER CAP
CN	: CONNECTOR
CN.BS.PIN	: CONNECTOR, BASE PIN
CN.CANNON	: CONNECTOR, CANNON
CN.DIN	: CONNECTOR, DIN
CN.FLAT	: CONNECTOR, FLAT CABLE
CN.POST	: CONNECTOR, BASE POST
COIL.MX.AM	: COIL, AM MIX
COIL.AT.FM	: COIL, FM ANTENNA
COIL.DT.FM	: COIL, FM DETECT
COIL.MX.FM	: COIL, FM MIX
COIL.OUTPT	: OUTPUT COIL
DIOD.ARRAY	: DIODE ARRAY
DIODE.BRG	: DIODE BRIDGE
DIODE.CHP	: CHIP DIODE
DIODE.VAR	: VARACTOR DIODE
DIOD.Z.CHP	: CHIP ZENER DIODE
DIODE.ZENR	: ZENER DIODE
DSCR.CE	: CERAMIC DISCRIMINATOR
FER.BEAD	: FERRITE BEADS
FER.CORE	: FERRITE CORE
FET.CHP	: CHIP FET
FL.DSPLY	: FLUORESCENT DISPLAY
FLTR.CE	: CERAMIC FILTER
FLTR.COMB	: COMB FILTER MODULE
FLTR.LC.RF	: LC FILTER ,EMI
GND.MTL	: GROUND PLATE
GND.TERM	: GROUND TERMINAL
HOLDER.FUS	: FUSE HOLDER
IC.PRTCT	: IC PROTECTOR
JUMPER.CN	: JUMPER CONNECTOR
JUMPER.TST	: JUMPER, TEST POINT
L.DTCT	: LIGHT DETECTING MODULE
L.EMIT	: LIGHT EMITTING MODULE
LED.DSPLY	: LED DISPLAY
LED.INFRD	: LED, INFRARED
MODUL.RF	: MODULATOR, RF
PHOT.CPL	: PHOTO COUPLER
PHOT.INTR	: PHOTO INTERRUPTER
PHOT.RFLCT	: PHOTO REFLECTOR
PIN.TEST	: PIN, TEST POINT
PLST.RIVET	: PLASTIC RIVET
R.ARRAY	: RESISTOR ARRAY
R.CAR	: CARBON RESISTOR
R.CAR.CHP	: CHIP RESISTOR
R.CAR.FP	: FLAME PROOF CARBON RESISTOR
R.FUS	: FUSABLE RESISTOR
R.MTL.CHP	: CHIP METAL FILM RESISTOR
R.MTL.FLM	: METAL FILM RESISTOR
R.MTL.OXD	: METAL OXIDE FILM RESISTOR
R.MTL.PLAT	: METAL PLATE RESISTOR
RSNR.CE	: CERAMIC RESONATOR
RSNR.CRYS	: CRYSTAL RESONATOR
R.TW.CEM	: TWIN CEMENT FIXED RESISTOR
R.WW	: WIRE WOUND RESISTOR
SCR.BND.HD	: BIND HEAD B-TITE SCREW
SCR.BW.HD	: BW HEAD TAPPING SCREW
SCR.CUP	: CUP TITE SCREW
SCR.TERM	: SCREW TERMINAL
SCR.TR	: SCREW, TRANSISTOR
SUPRT.PCB	: SUPPORT, P.C.B.
SURG.PRTCT	: SURGE PROTECTOR
SW.TACT	: TACT SWITCH
SW.LEAF	: LEAF SWITCH
SW.LEVER	: LEVER SWITCH
SW.MICRO	: MICRO SWITCH
SW.PUSH	: PUSH SWITCH
SW.RT.ENC	: ROTARY ENCODER
SW.RT.MTR	: ROTARY SWITCH WITH MOTOR
SW.RT	: ROTARY SWITCH
SW.SLIDE	: SLIDE SWITCH
TERM.SP	: SPEAKER TERMINAL
TERM.WRAP	: WRAPPING TERMINAL
THRMST.CHP	: CHIP THERMISTOR
TR.CHP	: CHIP TRANSISTOR
TR.DGT	: DIGITAL TRANSISTOR
TR.DGT.CHP	: CHIP DIGITAL TRANSISTOR
TRANS	: TRANSFORMER
TRANS.PULS	: PULSE TRANSFORMER
TRANS.PWR	: POWER TRANSFORMER ASS'y
TUNER.AM	: TUNER PACK, AM
TUNER.FM	: TUNER PACK, FM
TUNER.PK	: FRONT-END TUNER PACK
VR	: ROTARY POTENTIOMETER
VR.MTR	: POTENTIOMETER WITH MOTOR
VR.SW	: POTENTIOMETER WITH ROTARY SW
VR.SLIDE	: SLIDE POTENTIOMETER
VR.TRIM	: TRIMMER POTENTIOMETER

Note) Those parts marked with "#" are not included in the P.C.B. ass'y.

MAIN P. C. B.

	Schm Ref.	PART NO.	Description		
*		VQ132800	P.C.B.	MAIN(UCRAB)	
*		VQ132900	P.C.B.	MAIN(G)	
	CB1	VP682200	CN	52045	8P TE
	CB2	VD005200	CN.BS.PIN	PH i-TYPE	9P TE
	CB3	VL844800	CN.BS.PIN	XH	4P TE
	CB4	VP682200	CN	52045	8P TE
	CB5	VL845100	CN.BS.PIN	XH	7P TE
	CB6	VM859700	CN.BS.PIN	52045	16P TE
	CB7	VD004600	CN.BS.PIN	PH i-TYPE	3P TE
	CB8	VD005300	CN.BS.PIN	PH i-TYPE	10P TE
	CB9	VM859700	CN.BS.PIN	52045	16P TE
	CB10	VN773600	CN.BS.PIN	52045	28P TE
	CB11	VN773600	CN.BS.PIN	52045	28P TE
	CB12	VD004900	CN.BS.PIN	PH i-TYPE	6P TE
	C1	FG213100	C.CE	1000pF	50V(G)
	C2	VG290900	C.EL	10uF	50V
*	C3	VQ462700	C.MYLAR	270pF	50V
*	C4	VQ462700	C.MYLAR	270pF	50V
	C5	VG290900	C.EL	10uF	50V
	C6	VG290900	C.EL	10uF	50V
*	C7	VQ462700	C.MYLAR	270pF	50V
*	C8	VQ462700	C.MYLAR	270pF	50V
	C9	VG290900	C.EL	10uF	50V
	C10	VG290900	C.EL	10uF	50V
*	C11	VQ462700	C.MYLAR	270pF	50V
*	C12	VQ462700	C.MYLAR	270pF	50V
	C13	VG290900	C.EL	10uF	50V
	C14	VG290900	C.EL	10uF	50V
*	C15	VQ462700	C.MYLAR	270pF	50V
*	C16	VQ462700	C.MYLAR	270pF	50V
	C17	VG290900	C.EL	10uF	50V
	C18	VG290900	C.EL	10uF	50V
*	C19	VQ462700	C.MYLAR	270pF	50V
*	C20	VQ462700	C.MYLAR	270pF	50V
	C21	VG290900	C.EL	10uF	50V
	C22	VG290900	C.EL	10uF	50V
*	C23	VQ462700	C.MYLAR	270pF	50V
*	C24	VQ462700	C.MYLAR	270pF	50V
	C25	VG290900	C.EL	10uF	50V
	C26	VQ462600	C.MYLAR	220pF	50V(G)
	C27	VQ462600	C.MYLAR	220pF	50V(G)
	C28	VQ462600	C.MYLAR	220pF	50V(G)
	C29	VQ462600	C.MYLAR	220pF	50V(G)
	C30	VQ462600	C.MYLAR	220pF	50V(G)
	C31	VQ462600	C.MYLAR	220pF	50V(G)
	C32	VQ462600	C.MYLAR	220pF	50V(G)
	C33	VQ462600	C.MYLAR	220pF	50V(G)
*	C34	VQ462700	C.MYLAR	270pF	50V
*	C35	VQ462700	C.MYLAR	270pF	50V
*	C36	VQ462700	C.MYLAR	270pF	50V
*	C37	VQ462700	C.MYLAR	270pF	50V
*	C38	VQ462700	C.MYLAR	270pF	50V
*	C39	VQ462700	C.MYLAR	270pF	50V

* New Parts

	Schm Ref.	PART NO.	Description		
*	C40	VQ462700	C.MYLAR	270pF	50V
*	C41	VQ462700	C.MYLAR	270pF	50V
*	C42	VQ462700	C.MYLAR	270pF	50V
*	C43	VQ462700	C.MYLAR	270pF	50V
*	C44	VQ462700	C.MYLAR	270pF	50V
*	C45	VQ462700	C.MYLAR	270pF	50V
	C46	VG291200	C.EL	47uF	50V
	C47	VG291200	C.EL	47uF	50V
	C48	VG291200	C.EL	47uF	50V
	C49	VG291200	C.EL	47uF	50V
	C54	VD929600	C.EL	4.7uF	50V
	C55	VE741300	C.EL	1000uF	25V
	C56	VE741300	C.EL	1000uF	25V
	C57	VE742600	C.EL	47uF	25V
	C58	VK984200	C.MYLAR	220pF	50V
	C59	VK984200	C.MYLAR	220pF	50V
	C60	VE742600	C.EL	47uF	25V
*	C61	Vi716100	C.MYLAR	3300pF	50V
	C62	VQ282400	C.PP	5pF	630V
*	C63	VQ392600	C.MYLAR	330pF	50V
	C64	Vi715900	C.MYLAR	2200pF	50V
	C65	Vi541200	C.MYLAR	0.1uF	50V
	C66	VG291100	C.EL	33uF	50V
	C67	VG291100	C.EL	33uF	50V
	C68	VG291100	C.EL	33uF	50V
	C69	VG291100	C.EL	33uF	50V
	C70	Vi541200	C.MYLAR	0.1uF	50V
	C71	Vi715900	C.MYLAR	2200pF	50V
*	C72	VQ392600	C.MYLAR	330pF	50V
	C73	VQ282400	C.PP	5pF	630V
*	C74	Vi716100	C.MYLAR	3300pF	50V
*	C75	VQ082900	C.EL	33uF	16V
*	C76	VQ082900	C.EL	33uF	16V
	C77	VG290000	C.EL	0.1uF	50V
	C78	VG291200	C.EL	47uF	50V
	C79	VG289000	C.EL	220uF	25V
	C80	VG722100	C.EL	1uF	50V
	C81	VK512600	C.MYLAR	2200pF	50V(G)
	C81	VK984200	C.MYLAR	220pF	50V(UCRAB)
	C82	VK512600	C.MYLAR	2200pF	50V(G)
	C82	VK984200	C.MYLAR	220pF	50V(UCRAB)
	C83	VG291100	C.EL	33uF	50V
	C84	VG290600	C.EL	2.2uF	50V
	C85	VG722100	C.EL	1uF	50V
*	C86	VQ392700	C.EL	1000uF	25V
*	C87	VQ392700	C.EL	1000uF	25V
	C88	Vi541200	C.MYLAR	0.1uF	50V
	C89	Vi541200	C.MYLAR	0.1uF	50V
	C90	VF611200	C.CE.ML	0.1uF	50V
	C91	VG291100	C.EL	33uF	50V
	C92	VF611200	C.CE.ML	0.1uF	50V
	C93	VG291100	C.EL	33uF	50V
	C94	VF611200	C.CE.ML	0.1uF	50V

* New Parts

MAIN P. C. B.

Schm Ref.	PART NO.	Description		
C95	VG291100	C.EL	33uF	50V
C96	VD930900	C.CE.SMI	0.1uF	25V
C97	VF611200	C.CE.ML	0.1uF	50V
C104	VG291100	C.EL	33uF	50V
C105	VF466800	C.CE.TUBLR	100pF	50V
C106	VG286600	C.EL	1000uF	6.3V
C107	VG291100	C.EL	33uF	50V
C108	VF466800	C.CE.TUBLR	100pF	50V
C109	VG286600	C.EL	1000uF	6.3V
C110	VG291100	C.EL	33uF	50V
C111	VF466800	C.CE.TUBLR	100pF	50V
C112	VG286600	C.EL	1000uF	6.3V
C113	VQ082700	C.EL	10uF	16V
C114	VK512500	C.MYLAR	100pF	50V
C115	VK512500	C.MYLAR	100pF	50V
C116	VQ082700	C.EL	10uF	16V
C117	VK533800	C.PP	47pF	200V
C118	VK533800	C.PP	47pF	200V
C119	Vi715900	C.MYLAR	2200pF	50V
C121	VG290900	C.EL	10uF	50V
C122	VG287100	C.EL	470uF	10V
C123	VG287100	C.EL	470uF	10V
C124	VG290900	C.EL	10uF	50V
C126	Vi715900	C.MYLAR	2200pF	50V
C127	VK533800	C.PP	47pF	200V
C128	VK533800	C.PP	47pF	200V
* C129	VQ083000	C.EL	47uF	16V
C130	VK984200	C.MYLAR	220pF	50V
C131	VK984200	C.MYLAR	220pF	50V
* C132	VQ083000	C.EL	47uF	16V
C133	VG722100	C.EL	1uF	50V
C134	VE018800	C.EL	220uF	25V
C135	VE018800	C.EL	220uF	25V
C136	VF992600	C.EL	4700uF	5.5V
C137	VF611200	C.CE.ML	0.1uF	50V
C139	VG290500	C.EL	1uF	50V
C140	UA653680	C.MYLAR	6800pF	50V
C141	VG290100	C.EL	0.22uF	50V
C142	VG290500	C.EL	1uF	50V
C143	VG288900	C.EL	100uF	25V
C144	VE551900	C.CE	100pF	50V
C145	VE551900	C.CE	100pF	50V
C146	VG288900	C.EL	100uF	25V
C147	VG290100	C.EL	0.22uF	50V
C148	VG290500	C.EL	1uF	50V
C149	UA653680	C.MYLAR	6800pF	50V
C151	VG290500	C.EL	1uF	50V
C152	VG290900	C.EL	10uF	50V
C153	VF611200	C.CE.ML	0.1uF	50V
C154	VG290900	C.EL	10uF	50V
C155	VG288900	C.EL	100uF	25V
C156	FG212470	C.CE	470pF	50V
C157	VG290600	C.EL	2.2uF	50V

* New Parts

Schm Ref.	PART NO.	Description		
C158	VG290600	C.EL	2.2uF	50V
C159	FG212470	C.CE	470pF	50V
C160	VG288900	C.EL	100uF	25V
C161	VG290000	C.EL	0.1uF	50V
C162	FG212220	C.CE	220pF	50V
C163	UA654750	C.MYLAR	0.075uF	50V
C164	FG212220	C.CE	220pF	50V
C165	UA654220	C.MYLAR	0.022uF	50V
C166	UA654220	C.MYLAR	0.022uF	50V
C167	FG212220	C.CE	220pF	50V
C168	UA654750	C.MYLAR	0.075uF	50V
C169	FG212220	C.CE	220pF	50V
* C170	UA653130	C.MYLAR	1300pF	50V
* C171	UA653130	C.MYLAR	1300pF	50V
C172	VF467300	C.CE.TUBLR	0.01uF	16V
C173	VF467300	C.CE.TUBLR	0.01uF	16V
C174	VF467300	C.CE.TUBLR	0.01uF	16V
C175	VG289000	C.EL	220uF	25V
D1	iF004600	DIODE	1SS133	
D2	iF004600	DIODE	1SS133	
D3	iF004600	DIODE	1SS133	
D4	iF004600	DIODE	1SS133	
D5	iF004600	DIODE	1SS133	
D6	iF004600	DIODE	1SS133	
D7	iF004600	DIODE	1SS133	
D8	iF004600	DIODE	1SS133	
D9	iF004600	DIODE	1SS133	
D10	iF004600	DIODE	1SS133	
D11	iF004600	DIODE	1SS133	
D12	iF004600	DIODE	1SS133	
D13	iF004600	DIODE	1SS133	
D14	VG440500	DIODE.ZENR	MTZJ13B	13V
D15	iF004600	DIODE	1SS133	
D16	iF004600	DIODE	1SS133	
D17	VG438100	DIODE.ZENR	MTZJ6.2C	6.2V
D18	iF004600	DIODE	1SS133	
D19	VG437000	DIODE.ZENR	MTZJ4.7A	4.7V
D20	iF004600	DIODE	1SS133	
D21	iF004600	DIODE	1SS133	
D22	iF004600	DIODE	1SS133	
D23	VG438100	DIODE.ZENR	MTZJ6.2C	6.2V
D24	iF004600	DIODE	1SS133	
D25	VG438000	DIODE.ZENR	MTZJ6.2B	6.2V
D26	iF004600	DIODE	1SS133	
D27	iF004600	DIODE	1SS133	
D28	VG436800	DIODE.ZENR	MTZJ4.3B	4.3V
D29	VG438900	DIODE.ZENR	MTZJ8.2B	8.2V
D30	iF004600	DIODE	1SS133	
IC1	iG069200	IC	NJM2041D-D	
IC2	iG069200	IC	NJM2041D-D	
IC3	iG069200	IC	NJM2041D-D	
IC4	iG069200	IC	NJM2041D-D	
IC5	iG069200	IC	NJM2041D-D	

* New Parts

MAIN P. C. B.

Schm Ref.	PART NO.	Description	
IC6	iG069200	IC	NJM2041D-D
IC7	XA549A00	IC	LB1294
IC8	XH436A00	IC	LA7956
IC9	XH436A00	IC	LA7956
IC10	XH436A00	IC	LA7956
IC11	XM100A00	IC	LC66304A
IC12	XF557A00	IC	TA7291S
IC13	XF557A00	IC	TA7291S
IC14	XA956A00	IC	NJM2068S
* PJ1	VP917100	JACK.PIN	2P
PJ2	VQ392800	JACK.PIN	6P
PJ3	VQ392800	JACK.PIN	6P
* PJ4	VQ405800	JACK.PIN	6P
PJ5	VM704500	JACK.PIN	2P
PJ6	VK177200	JACK.PIN	3P
PJ7	VK177200	JACK.PIN	3P
Q1	iC332720	TR	2SC3327
Q2	iC332720	TR	2SC3327
Q3	iC332720	TR	2SC3327
Q4	iC332720	TR	2SC3327
Q5	iC332720	TR	2SC3327
Q6	iC332720	TR	2SC3327
Q7	iC332720	TR	2SC3327
Q8	iC332720	TR	2SC3327
Q9	iC332720	TR	2SC3327
Q10	iC332720	TR	2SC3327
Q11	iC332720	TR	2SC3327
Q12	iC332720	TR	2SC3327
Q13	iC332720	TR	2SC3327
Q14	iC332720	TR	2SC3327
Q15	iC332720	TR	2SC3327
Q16	iC332720	TR	2SC3327
Q17	iC332720	TR	2SC3327
Q18	iC332720	TR	2SC3327
Q19	iC332720	TR	2SC3327
Q20	iC332720	TR	2SC3327
Q21	iC332720	TR	2SC3327
Q22	iC332720	TR	2SC3327
Q23	iC332720	TR	2SC3327
Q24	iC332720	TR	2SC3327
Q25	iC332720	TR	2SC3327
Q26	iC332720	TR	2SC3327
Q27	iC332720	TR	2SC3327
Q28	iC332720	TR	2SC3327
Q29	iC332720	TR	2SC3327
Q30	iC332720	TR	2SC3327
Q31	iC332720	TR	2SC3327
Q32	iC332720	TR	2SC3327
Q33	iC332720	TR	2SC3327
Q34	iC332720	TR	2SC3327
Q35	iC332720	TR	2SC3327
Q36	iC332720	TR	2SC3327
Q37	iC332720	TR	2SC3327

* New Parts

Schm Ref.	PART NO.	Description	
Q38	iC332720	TR	2SC3327
Q39	iC332720	TR	2SC3327
Q40	iC332720	TR	2SC3327
Q41	iC1815C0	TR	2SC1815 Y
Q42	iC1815C0	TR	2SC1815 Y
Q43	iA101521	TR	2SA1015 Y
Q44	iA101521	TR	2SA1015 Y
Q45	VK432900	TR	2SD1915F S,T
Q46	VK432900	TR	2SD1915F S,T
Q48	iA101521	TR	2SA1015 Y
Q49	VD678700	TR.DGT	DTC114ES
Q50	iA101521	TR	2SA1015 Y
Q51	iC224030	TR	2SC2240 GR,BL
Q52	iC224030	TR	2SC2240 GR,BL
Q53	iC224030	TR	2SC2240 GR,BL
Q54	iC224030	TR	2SC2240 GR,BL
Q55	iA101521	TR	2SA1015 Y
Q57	iA101521	TR	2SA1015 Y
Q58	iA101521	TR	2SA1015 Y
Q59	iD043820	TR	2SD438 E,F
Q60	iB056020	TR	2SB560 E,F
Q61	iB056020	TR	2SB560 E,F
Q62	iD043820	TR	2SD438 E,F
Q65	VD678500	TR.DGT	DTA114ES
Q66	iA101521	TR	2SA1015 Y
Q67	VD678700	TR.DGT	DTC114ES
Q68	VD678700	TR.DGT	DTC114ES
⚠ Q69	VC407900	TR	2SD1913 R,S
Q70	iC260320	TR	2SC2603 E,F
Q71	iC224030	TR	2SC2240 GR,BL
Q72	iA101521	TR	2SA1015 Y
Q73	VD678700	TR.DGT	DTC114ES
Q74	VD678700	TR.DGT	DTC114ES(G)
Q75	iA111510	TR	2SA1115 E,F
Q76	iC224030	TR	2SC2240 GR,BL
Q77	iC224030	TR	2SC2240 GR,BL
Q78	iA101521	TR	2SA1015 Y
Q79	iC224030	TR	2SC2240 GR,BL
Q80	iC224030	TR	2SC2240 GR,BL
Q81	iA101521	TR	2SA1015 Y
Q82	iD043820	TR	2SD438 E,F
Q83	iB056020	TR	2SB560 E,F
Q84	VK432900	TR	2SD1915F S,T
Q85	iB056020	TR	2SB560 E,F
Q86	VK432900	TR	2SD1915F S,T
Q87	iD043820	TR	2SD438 E,F
Q88	VD678500	TR.DGT	DTA114ES
Q89	VD678700	TR.DGT	DTC114ES
Q90	iC1815C0	TR	2SC1815 Y
Q91	iC1815C0	TR	2SC1815 Y
Q93	VD678700	TR.DGT	DTC114ES
Q94	VD678700	TR.DGT	DTC114ES
Q95	VD678700	TR.DGT	DTC114ES

* New Parts

MAIN & EQUALIZER P. C. B.

Schm Ref.	PART NO.	Description		
Q96	iD127510	TR	2SD1275 P,Q,R	
R120	HV454100	R.CAR.FP	10Ω	1/4W
R122	HV454100	R.CAR.FP	10Ω	1/4W
R157	HV454220	R.CAR.FP	22Ω	1/4W
R158	HV454220	R.CAR.FP	22Ω	1/4W
R163	HV455100	R.CAR.FP	100Ω	1/4W
R164	HV455100	R.CAR.FP	100Ω	1/4W
R167	HV455100	R.CAR.FP	100Ω	1/4W
R168	HV455100	R.CAR.FP	100Ω	1/4W
R173	HV455560	R.CAR.FP	560Ω	1/4W
R180	HV454220	R.CAR.FP	22Ω	1/4W
R196	VQ245500	R.ARRAY	RGLE10X104J	
R197	HV454100	R.CAR.FP	10Ω	1/4W
R198	HV454100	R.CAR.FP	10Ω	1/4W
R204	HV454330	R.CAR.FP	33Ω	1/4W
R205	HV454330	R.CAR.FP	33Ω	1/4W
R206	HV454330	R.CAR.FP	33Ω	1/4W
R207	HV454100	R.CAR.FP	10Ω	1/4W
R247	HV455100	R.CAR.FP	100Ω	1/4W
R249	HV455100	R.CAR.FP	100Ω	1/4W
R255	HV455100	R.CAR.FP	100Ω	1/4W
R258	HV455100	R.CAR.FP	100Ω	1/4W
R267	HV454100	R.CAR.FP	10Ω	1/4W
R268	HV454100	R.CAR.FP	10Ω	1/4W
RY1	VM640200	RELAY	RY12W-OH-K DC12V	
* SW1	VQ117600	SW.RT	SRBA2-0-8	MOTOR
* SW2	VQ019000	SW.PUSH	SPUL12	
* SW3	VQ019100	SW.PUSH	SPUL19	
* VR1	VQ117800	VR.MTR	50KΩx2,20KΩx2	
* VR2	VQ019500	VR	30KΩ	
* VR3	VQ019600	VR	MN50KΩ	
* VR4	VQ019400	VR	16KΩ	
* VR5	VQ019300	VR	10KΩ	
W9	VP796400	CN.FLAT	8P	150mm
W10	VQ120500	CN.FLAT	28P	70mm
W11	VQ157200	CN.FLAT	16P	60mm
XL1	VB759100	RSNR.CE	4MHz	
	VB966900	CN	IMSA-6024	
	VK509500	HEAT.SINK	OSH-1025	CDI-P11X
	EG330290	SCR.BND.HD	3x8 SP	ZMC2-Y
	VN390800	DAMPER		

* New Parts

Schm Ref.	PART NO.	Description		
*	VQ133000	P.C.B.	EQ(UC)	
*	VQ133100	P.C.B.	EQ(R)	
*	VQ133200	P.C.B.	EQ(AB)	
*	VQ133300	P.C.B.	EQ(G)	
CB501	VB858800	CN.BS.PIN	PH L-TYPE	9P SE
⚠ CB502	VG879900	CN.BS.PIN	VH	2P TE
CB508	LB919020	CN.BS.PIN	XH L-TYPE	2P SE
CB510	LB919090	CN.POST	XH	9P SE
CB513	VP206500	HOLDER.FUS	EYF-52BC(G)	
CB514	VP206500	HOLDER.FUS	EYF-52BC(G)	
CB515	VB858400	CN.BS.PIN	PH L-TYPE	5P SE
C501	UG444100	C.CE	0.01uF	50V
C502	UG444100	C.CE	0.01uF	50V
C503	VG286400	C.EL	330uF	6.3V
C504	UA654100	C.MYLAR	0.01uF	50V(UCRAB)
C504	UA654180	C.MYLAR	0.018uF	50V(G)
C505	UA654100	C.MYLAR	0.01uF	50V(UCRAB)
C505	UA654180	C.MYLAR	0.018uF	50V(G)
C506	Vi715700	C.MYLAR	1500pF	50V
C507	VG286400	C.EL	330uF	6.3V
C508	Vi715700	C.MYLAR	1500pF	50V
⚠ C509	Fi514100	C.CE.SAFTY	0.01uF	VA-1
C511	VG288900	C.EL	100uF	25V
C512	Vi715500	C.MYLAR	1000pF	50V
C513	UT452220	C.PP	220pF	100V(UCRAB)
C513	UT452330	C.PP	330pF	100V(G)
C514	UT452220	C.PP	220pF	100V(UCRAB)
C514	UT452330	C.PP	330pF	100V(G)
C515	Vi715500	C.MYLAR	1000pF	50V
C516	VG288900	C.EL	100uF	25V
C517	Vi715100	C.MYLAR	470pF	50V
C518	Vi717200	C.MYLAR	0.027uF	50V
C519	VG286600	C.EL	1000uF	6.3V
C520	VG286600	C.EL	1000uF	6.3V
C521	Vi717200	C.MYLAR	0.027uF	50V
C522	Vi715100	C.MYLAR	470pF	50V
C523	VG291000	C.EL	22uF	50V
C524	VG290900	C.EL	10uF	50V
C525	VG290900	C.EL	10uF	50V
C527	VG290900	C.EL	10uF	50V
C528	UA654470	C.MYLAR	0.047uF	50V
C529	UA355100	C.MYLAR	0.1uF	50V
C530	UA654150	C.MYLAR	0.015uF	50V
C531	UA654150	C.MYLAR	0.015uF	50V
C532	UA355100	C.MYLAR	0.1uF	50V
C533	UA654470	C.MYLAR	0.047uF	50V
C534	VG290900	C.EL	10uF	50V
C536	VG291200	C.EL	47uF	50V
C537	VG288900	C.EL	100uF	25V
C538	VG291200	C.EL	47uF	50V
C539	UA654470	C.MYLAR	0.047uF	50V
C540	UA654680	C.MYLAR	0.068uF	50V
C541	UA654680	C.MYLAR	0.068uF	50V

* New Parts

EQUALIZER P. C. B.

	Schm Ref.	PART NO.	Description		
	C546	UA654470	C.MYLAR	0.047uF	50V
	C547	UA654680	C.MYLAR	0.068uF	50V
	C548	UA654680	C.MYLAR	0.068uF	50V
⚠	C549	UA654100	C.MYLAR	0.01uF	50V
⚠	C550	VF999100	C.EL	2200uF	25V
⚠	C551	VG289200	C.EL	470uF	25V
⚠	C552	VK534100	C.PP	0.01uF	100V
⚠*	C553	VP979100	C.EL	4700uF	35V
⚠*	C554	VP979100	C.EL	4700uF	35V
⚠	C555	VK534100	C.PP	0.01uF	100V
	C557	VE741300	C.EL	1000uF	25V
	C559	VE741300	C.EL	1000uF	25V
	C563	UG444100	C.CE	0.01uF	50V
	C566	VF611200	C.CE.ML	0.1uF	50V
	C567	Vi842400	C.EL	33uF	16V
	C570	VF611200	C.CE.ML	0.1uF	50V
	C571	Vi842400	C.EL	33uF	16V
	C575	VF611200	C.CE.ML	0.1uF	50V
	C576	Vi842400	C.EL	33uF	16V
	C579	VF611200	C.CE.ML	0.1uF	50V
	C580	Vi842400	C.EL	33uF	16V
	C583	VF611200	C.CE.ML	0.1uF	50V
	C584	Vi842400	C.EL	33uF	16V
	C588	VF611200	C.CE.ML	0.1uF	50V
	C589	Vi842400	C.EL	33uF	16V
	C590	Vi842400	C.EL	33uF	16V
	C591	Vi845900	C.EL	10uF	63V
	C592	Vi842400	C.EL	33uF	16V
	C593	Vi845900	C.EL	10uF	63V
	C594	Vi842400	C.EL	33uF	16V
	C595	Vi842400	C.EL	33uF	16V
	C596	Vi842400	C.EL	33uF	16V
	C597	Vi841400	C.EL	1000uF	6.3V
	C598	Vi845900	C.EL	10uF	63V
	C599	Vi841400	C.EL	1000uF	6.3V
	C600	Vi841400	C.EL	1000uF	6.3V
	C601	Vi842400	C.EL	33uF	16V
	C602	VF466800	C.CE.TUBLR	100pF	50V
	C603	VF466800	C.CE.TUBLR	100pF	50V
	C604	VF466800	C.CE.TUBLR	100pF	50V
	C605	VF466800	C.CE.TUBLR	100pF	50V
	C606	VF466800	C.CE.TUBLR	100pF	50V
	C607	VF466800	C.CE.TUBLR	100pF	50V
	C608	VK984200	C.MYLAR	220pF	50V
	C609	VK984200	C.MYLAR	220pF	50V
	C610	VG290900	C.EL	10uF	50V
	C611	VG290900	C.EL	10uF	50V
	C612	VK533900	C.PP	100pF	200V
	C613	VK533900	C.PP	100pF	200V
*	C614	VQ392600	C.MYLAR	330pF	50V
*	C615	VQ392600	C.MYLAR	330pF	50V
	C616	VG291100	C.EL	33uF	50V
	C617	VG291100	C.EL	33uF	50V

* New Parts

	Schm Ref.	PART NO.	Description		
	C618	VQ282400	C.PP	5pF	630V
	C619	VQ282400	C.PP	5pF	630V
	C620	UA655100	C.MYLAR	0.1uF	50V
	C621	UA655100	C.MYLAR	0.1uF	50V
	C622	VG291100	C.EL	33uF	50V
	C623	VG291100	C.EL	33uF	50V
	C624	Vi715900	C.MYLAR	2200pF	50V
	C625	Vi715900	C.MYLAR	2200pF	50V
	C626	VE741300	C.EL	1000uF	25V
	C627	VE741300	C.EL	1000uF	25V
	C628	Vi716100	C.MYLAR	3300pF	50V
	C629	Vi716100	C.MYLAR	3300pF	50V
	C630	VG290900	C.EL	10uF	50V
	C631	VG290900	C.EL	10uF	50V
	C632	Vi845600	C.EL	47uF	50V
	C633	Vi845600	C.EL	47uF	50V
	C634	UA652100	C.MYLAR	100pF	50V
	C635	UA652100	C.MYLAR	100pF	50V
	C636	UA654100	C.MYLAR	0.01uF	50V
	C637	UA654100	C.MYLAR	0.01uF	50V
	C638	VG291000	C.EL	22uF	50V
	C639	VG291000	C.EL	22uF	50V
	C640	VG290900	C.EL	10uF	50V
	C641	VG290900	C.EL	10uF	50V
	C642	VG290900	C.EL	10uF	50V
	C643	VG290900	C.EL	10uF	50V
	C645	VG289000	C.EL	220uF	25V
	C646	VG289000	C.EL	220uF	25V
	C647	UG444100	C.CE	0.01uF	50V
	C648	UA653100	C.MYLAR	1000pF	50V
	C649	UA653100	C.MYLAR	1000pF	50V
	C650	VF467300	C.CE.TUBLR	0.01uF	16V
	C651	VF467300	C.CE.TUBLR	0.01uF	16V
	C652	VF467300	C.CE.TUBLR	0.01uF	16V
	C653	VG291200	C.EL	47uF	50V
	C654	VQ463000	C.MYLAR	0.047uF	50V(G)
	C655	VG278400	C.CE.TUBLR	220pF	50V(G)
	C656	VG278400	C.CE.TUBLR	220pF	50V(G)
	C657	VP809300	C.MYLAR	0.01uF	50V(G)
	C658	VP809300	C.MYLAR	0.01uF	50V(G)
	D501	iF004600	DIODE	1SS133	
	D502	iF004600	DIODE	1SS133	
	D503	iF004600	DIODE	1SS133	
	D504	VG438100	DIODE.ZENR	MTZJ6.2C	6.2V
⚠	D505	VH801600	DIODE	1SR139-100	
⚠	D506	VH801600	DIODE	1SR139-100	
⚠	D507	VH801600	DIODE	1SR139-100	
⚠	D508	VH801600	DIODE	1SR139-100	
⚠	D509	VH801600	DIODE	1SR139-100	
⚠	D510	VH801600	DIODE	1SR139-100	
⚠	D511	VH801600	DIODE	1SR139-100	
⚠	D512	VH801600	DIODE	1SR139-100	
⚠	D513	VH801600	DIODE	1SR139-100	

* New Parts

EQUALIZER P. C. B.

	Schm Ref.	PART NO.	Description	
	D515	Vi013600	LED(re)	SLR-34VC3H3
	D516	Vi013600	LED(re)	SLR-34VC3H3
	D517	Vi013600	LED(re)	SLR-34VC3H3
	D518	VG437300	DIODE.ZENR	MTZJ5.1A 5.1V
⚠	F501	KB002980	FUSE	T2.5A 250V(G)
	IC501	iG092100	IC	M5219L
	IC502	iG092100	IC	M5219L
	IC503	XE322001	IC	NJM2068S-D
	IC504	XE322001	IC	NJM2068S-D
	IC505	XH436A00	IC	LA7956
	IC506	XH436A00	IC	LA7956
	IC507	XH436A00	IC	LA7956
	IC508	XH436A00	IC	LA7956
	IC509	XH436A00	IC	LA7956
	IC510	XH436A00	IC	LA7956
	IC512	iG077410	IC	NJM4556S-A
	JK501	VA984400	JACK.PHONE	
	JK503	VJ573000	JACK.MNI	JC-6
	L501	VF541100	COIL	15uH(G)
	L502	VF541100	COIL	15uH(G)
	L503	VB056900	COIL	220uH
	L505	VB056900	COIL	220uH
	PJ501	VP513800	JACK.PIN	2P
	PJ502	VN938100	CN.DIN	3P,S
	PJ503	VN938100	CN.DIN	3P,S
	PJ504	VM704500	JACK.PIN	2P
	Q501	VQ152400	TR	2SD786 R
	Q502	VQ152400	TR	2SD786 R
	Q503	VQ152400	TR	2SD786 R
	Q504	VQ152400	TR	2SD786 R
	Q505	VQ152400	TR	2SD786 R
	Q506	VQ152400	TR	2SD786 R
	Q507	VQ152400	TR	2SD786 R
	Q508	VQ152400	TR	2SD786 R
	Q509	iC1815C0	TR	2SC1815 Y
⚠	Q510	iD127510	TR	2SD1275 P,Q,R
	Q511	iC1815C0	TR	2SC1815 Y
	Q512	iA101521	TR	2SA1015 Y
⚠	Q513	iB094910	TR	2SB949 P,Q,R
	Q514	iA101521	TR	2SA1015 Y
	Q515	iC1815C0	TR	2SC1815 Y
	Q516	iC224030	TR	2SC2240 GR,BL
	Q517	iC224030	TR	2SC2240 GR,BL
	Q518	iC224030	TR	2SC2240 GR,BL
	Q519	iC224030	TR	2SC2240 GR,BL
	Q520	iA101521	TR	2SA1015 Y
	Q521	iA101521	TR	2SA1015 Y
	Q522	iD043820	TR	2SD438 E,F
	Q523	iD043820	TR	2SD438 E,F
	Q524	iB056020	TR	2SB560 E,F
	Q525	iB056020	TR	2SB560 E,F
	Q526	VK432900	TR	2SD1915F S,T
	Q527	VK432900	TR	2SD1915F S,T

* New Parts

	Schm Ref.	PART NO.	Description	
	Q528	VK432900	TR	2SD1915F S,T
	Q529	VK432900	TR	2SD1915F S,T
	Q530	VK432900	TR	2SD1915F S,T
	Q531	VK432900	TR	2SD1915F S,T
	R510	HL416150	R.MTL.OXD	1.5KΩ 1W
	R511	HL416150	R.MTL.OXD	1.5KΩ 1W
	R530	HU577270	R.MTL.FLM	2.7KΩ 1/4W
	R535	HU577270	R.MTL.FLM	2.7KΩ 1/4W
*	R545	HU577330	R.MTL.FLM	33KΩ 1/4W
*	R550	HU577330	R.MTL.FLM	33KΩ 1/4W
⚠	R561	HV453100	R.CAR.FP	1Ω 1/4W
	R570	HV454820	R.CAR.FP	82Ω 1/4W
⚠	R571	HV453100	R.CAR.FP	1Ω 1/4W
⚠	R574	HV453100	R.CAR.FP	1Ω 1/4W
⚠	R577	HV454100	R.CAR.FP	10Ω 1/4W
⚠	R578	HV454100	R.CAR.FP	10Ω 1/4W
	R586	HV454330	R.CAR.FP	33Ω 1/4W
	R587	HV454330	R.CAR.FP	33Ω 1/4W
	R588	HV454330	R.CAR.FP	33Ω 1/4W
	R589	HV454330	R.CAR.FP	33Ω 1/4W
	R590	HV454330	R.CAR.FP	33Ω 1/4W
	R591	HV454330	R.CAR.FP	33Ω 1/4W
	R634	HV455100	R.CAR.FP	100Ω 1/4W
	R635	HV455100	R.CAR.FP	100Ω 1/4W
	R636	HV455100	R.CAR.FP	100Ω 1/4W
	R637	HV455100	R.CAR.FP	100Ω 1/4W
⚠	R638	HV454100	R.CAR.FP	10Ω 1/4W
⚠	R639	HV454100	R.CAR.FP	10Ω 1/4W
	R656	HL324680	R.MTL.OXD	68Ω 2W
	R657	HL324680	R.MTL.OXD	68Ω 2W
	R667	HV454100	R.CAR.FP	10Ω 1/4W
	R668	HV454100	R.CAR.FP	10Ω 1/4W
⚠	RY501	VD506000	RELAY	AC DG12D1-OM
	SW501	VA983800	SW.PUSH	SPUN
⚠*	SW503	VQ018900	SW.RT	SRBV
	SW504	VG392900	SW.TACT	SKHVAA
⚠	T501	XM223A00	TRANS.PWR	(UC)
⚠	T501	XM224A00	TRANS.PWR	(R)
⚠	T501	XM225A00	TRANS.PWR	(AB)
⚠	T501	XM226A00	TRANS.PWR	(G)
⚠	TE501	Vi327500	OUTLET.AC	3P(UCR)
⚠	TE501	VP728600	OUTLET.AC	3P(G)
	TP501	VL448600	JUMPER.TST	
	TP502	VL448600	JUMPER.TST	
	U501	VF926500	L.DTCT	GP1U501X
		BB071360	SCR.TERM	8.3x13
		VP898700	HEAT.SINK	OSH-4725C
		VN630700	COVER.CAP	HY-0105(G)
		EX602250	SCR.BND.HD	3x12 ZMC2-BL
		AA626420	PLATE	16
		AA615100	PLATE	20x30

* New Parts

■ EXPLODED VIEW

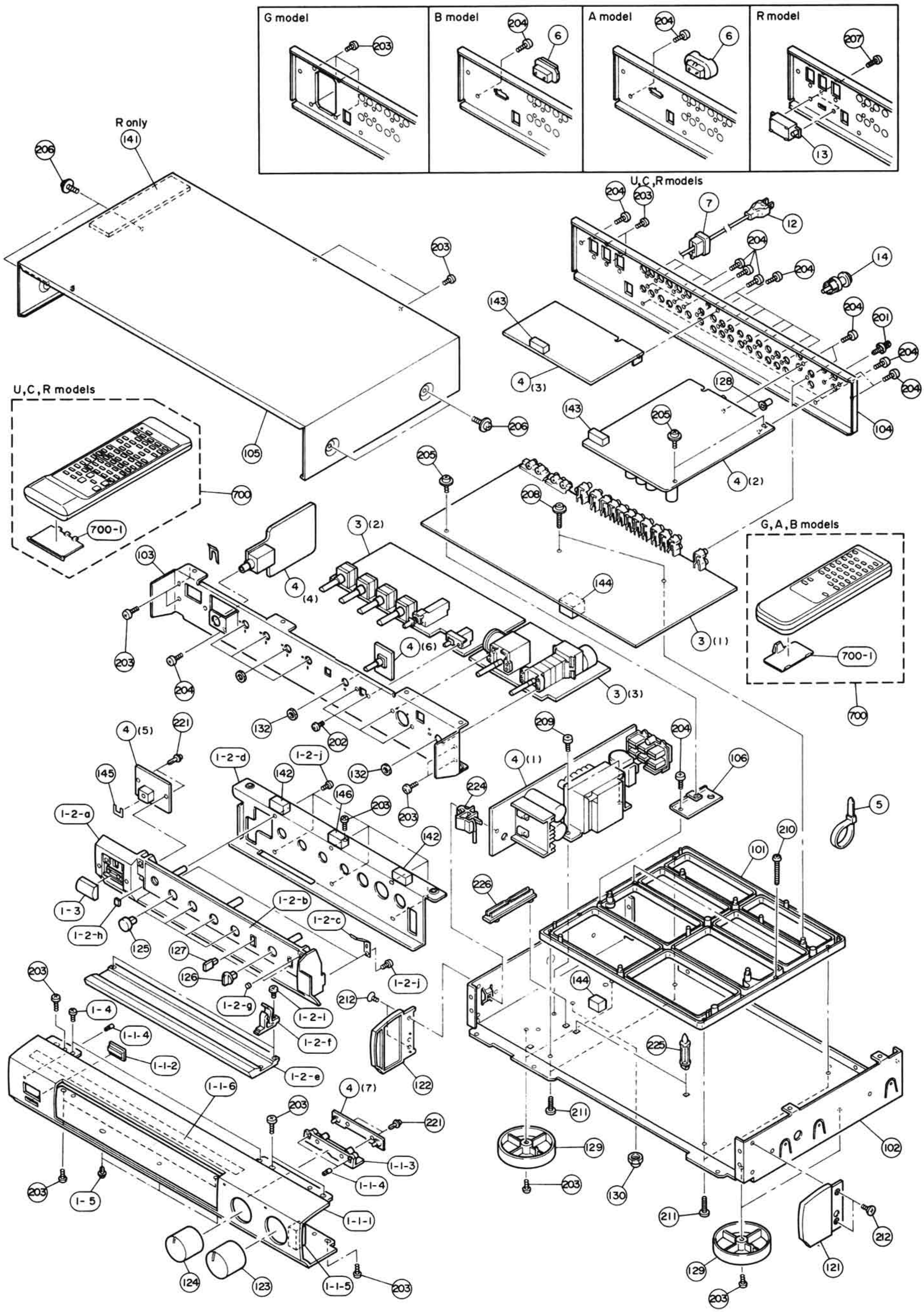

■ MECHANICAL PARTS Note) Ø : Diameter

	Ref. No.	PART NO.	Description		Remarks	Markets
*	1-1-1	VP945400	FRONT PANEL			
	1-1-2	VH897500	LENS			
*	1-1-3	VQ100100	HOLDER, LED			
	1-1-4	VH897700	LENS			
	1-1-5	VP652700	CUSHION, P.C.B.	10x20x11		
	1-1-6	VQ321900	CUSHION			
*	1-2-a	VP972100	SUB PANEL CASE			
*	1-2-b	VP945700	PLATE, LID			
*	1-2-c	VP966300	SPRING			
*	1-2-d	VP948400	STAY			
*	1-2-e	VP945500	SUB PANEL, LID			
*	1-2-f	VP966200	HINGE, STOPPER	B		
	1-2-g	VQ457700	DAMPER			
*	1-2-h	VQ193100	DAMPER	SUB P		
	1-2-i	ED330066	BIND HEAD SCREW	3x6 FCRM3-BL		
	1-2-j	EP600730	BIND HEAD P-TITE SCREW	3x8 FCRM3-BL		
*	1-3	VP966600	COVER, POWER SWITCH	B		
	1-4	EX602700	BIND HEAD S-TITE SCREW	3x4 FCRM3-BL		
	1-5	CB068880	PLASTIC RIVET	No.1027		
*	3	VQ132800	P.C.B. ASS'y, MAIN			(UCRAB)
*	3	VQ132900	P.C.B. ASS'y, MAIN			(G)
*	4	VQ133000	P.C.B. ASS'y, EQUALIZER			(UC)
*	4	VQ133100	P.C.B. ASS'y, EQUALIZER			(R)
*	4	VQ133200	P.C.B. ASS'y, EQUALIZER			(AB)
*	4	VQ133300	P.C.B. ASS'y, EQUALIZER			(G)
	5	CB069250	BINDING TIE	BK-1		
⚠	6	VJ775000	AC OUTLET	2P		(B)
⚠	6	VP418700	AC OUTLET	2P		(A)
	7	VN158600	CORD STOPPER	No.2104		
⚠	12	VL012900	POWER CORD ASS'y			(UC)
⚠	12	VL238100	POWER CORD ASS'y			(R)
⚠	12	VL238900	POWER CORD ASS'y			(G)
⚠	12	VN804500	POWER CORD ASS'y			(B)
⚠	12	VP418300	POWER CORD ASS'y			(A)
⚠	13	VE962600	SLIDE SWITCH	SDKGA4		(R)
	14	LB100180	SHORT PLUG	P2144		
	101	VM733700	CHASSIS			
*	102	VP946100	CHASSIS			
*	103	VP946200	SUB CHASSIS			
*	104	VP946400	REAR PANEL			(UC)
*	104	VP946500	REAR PANEL			(R)
*	104	VP946600	REAR PANEL			(AB)
*	104	VP946700	REAR PANEL			(G)
	105	VP794600	TOP COVER			
*	106	VQ400400	HOLDER, PCB			
*	121	VP946900	PLATE, SIDE	R.B		
*	122	VP947000	PLATE, SIDE	R.B		
*	123	VQ059400	KNOB	Ø31	VOLUME	
*	124	VQ059200	KNOB	Ø28	INPUT	
	125	VG078900	KNOB	Ø12	BS.TR.BAL.LOUD.	
	126	VG079100	KNOB	Ø12	REC OUT	
*	127	VP975600	BUTTON	4x10	P.DRCT,S.FLTR	
	128	VM806700	BUTTON	Ø6	MM/MC	

* New Parts

	Ref. No.	PART NO.	Description			Remarks	Markets
	129	VK016800	LEG				
	130	EX601580	HEXAGONAL BLIND NUT	Ø4	FCRM3-BL		
	132	VQ354100	GUIDE	SHAFT			
*	141	VQ195300	SHEET, TOP				(R)
	142	VN906900	DAMPER	F			
	143	VN033600	CUSHION	PCB			
	144	VP665700	CUSHION				
	145	VQ321800	DAMPER	PCB			
	146	VG869500	DAMPER				
	201	AA627310	GROUND TERMINAL				
	202	ED330066	BIND HEAD SCREW	3x6	FCRM3-BL		
	203	Ei330086	BIND HEAD TAPPING SCREW	3x8	FCM3		
	204	EN301010	BIND HEAD BONDING TAP. SCREW	3x8	FCRM3-BL		
	205	EX602610	BW HEAD B-TITE SCREW	3x6-8	FCM3		
	206	EL300470	BW HEAD S-TITE SCREW	4x8-10	FCRM3-BL		
	207	VF617600	PAN HEAD P-TITE SCREW	2.6x8	FCRM3-BL		(R)
	208	VB770200	BW HEAD P-TITE SCREW	3x10-8	FCM3		
	209	EK365020	BW HEAD SCREW	4x6	FCRM3-BL		
*	210	VQ620700	BIND HEAD B-TITE SCREW	2.6x14			
	211	EX601360	BIND HEAD P-TITE SCREW	3x10	FCRM3-BL		
	212	EO330066	FLAT HEAD B-TITE SCREW	3x6	FCRM3-BL		
	221	CB605620	PLASTIC RIVET	No.1781			
*	224	VQ283800	SUPPORT, P.C.B.	No.4815			
*	225	VQ195200	SUPPORT, P.C.B.	No.145			
*	226	VQ276000	SUPPORT, P.C.B.	No.807			
			ACCESSORIES				
*	700	VQ086300	REMOTE CONTROL TRANSMITTER				(AGB)
*	700	VQ086400	REMOTE CONTROL TRANSMITTER				(UCR)
	700-1	CX673000	LID	56x33KURON		K-PM2-385-1	
	700-1	CX674400	LID	56x40.5SMK		103RRC-031-02R	
		CX618490	USER PROGRAM SHEET				(UCR)
*		VQ139100	CORD WITH MINI-PLUG	1P			
*		VL808700	PIN-PLUG CORD	2P	1.2m		
			BATTERY, MANGANESE	SUM-3,AA,R06			

* New Parts

REMOTE CONTROL TRANSMITTER
U, C, R models

■ SCHEMATIC DIAGRAM

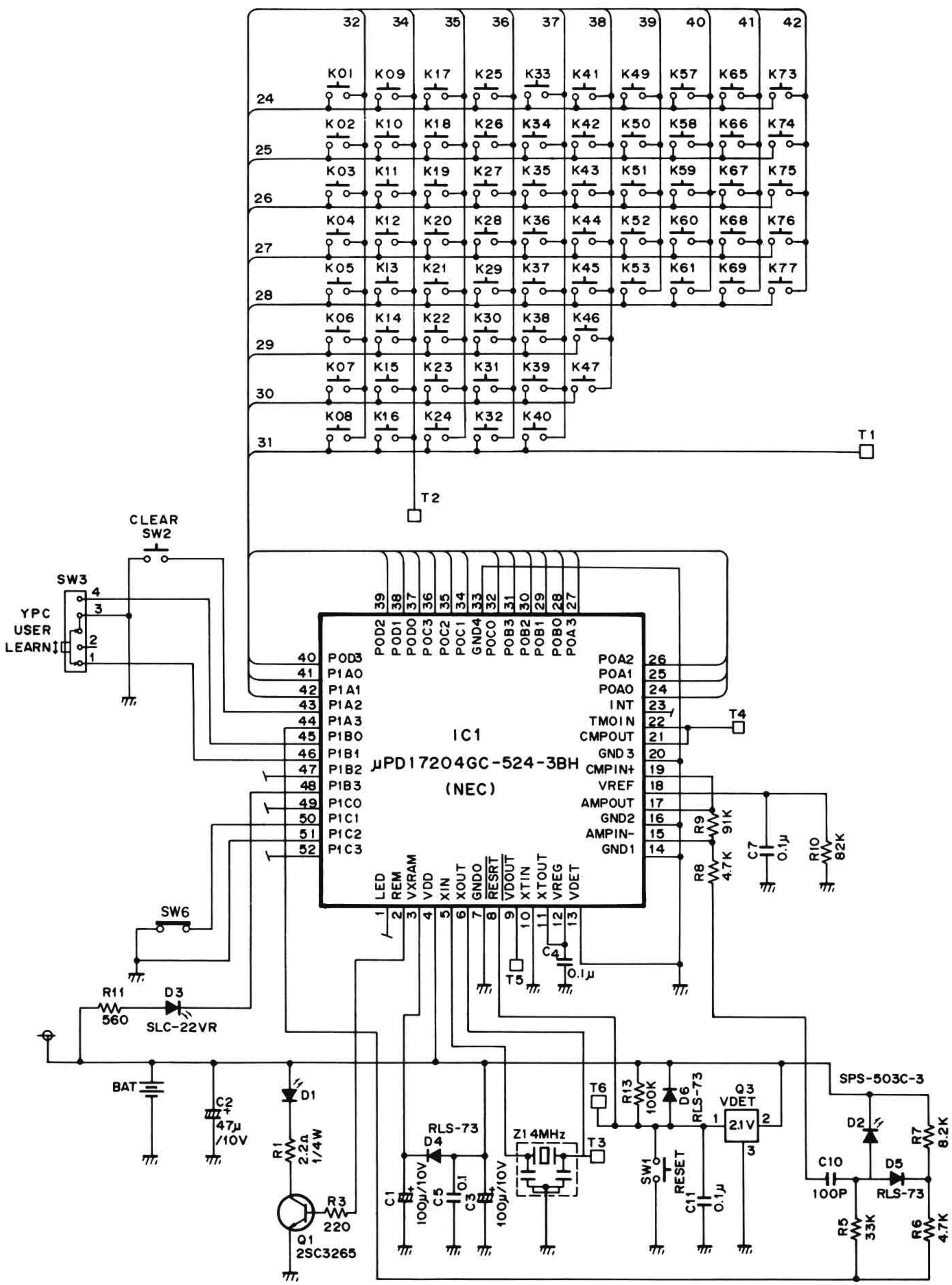

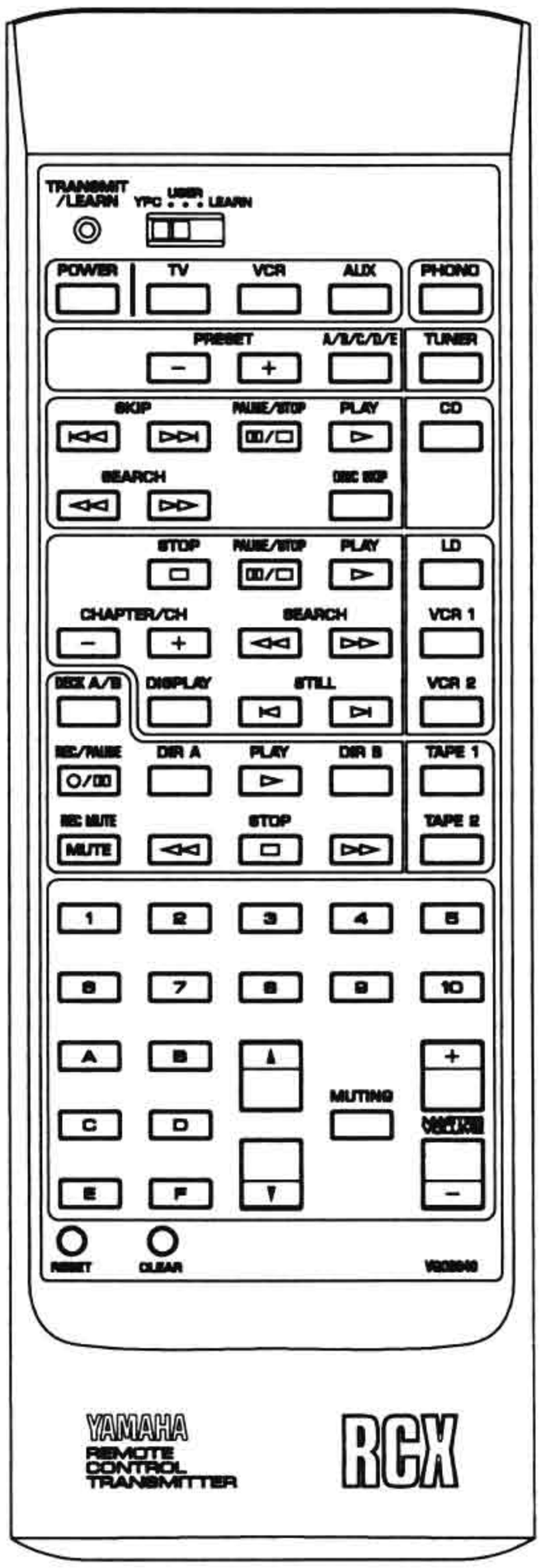

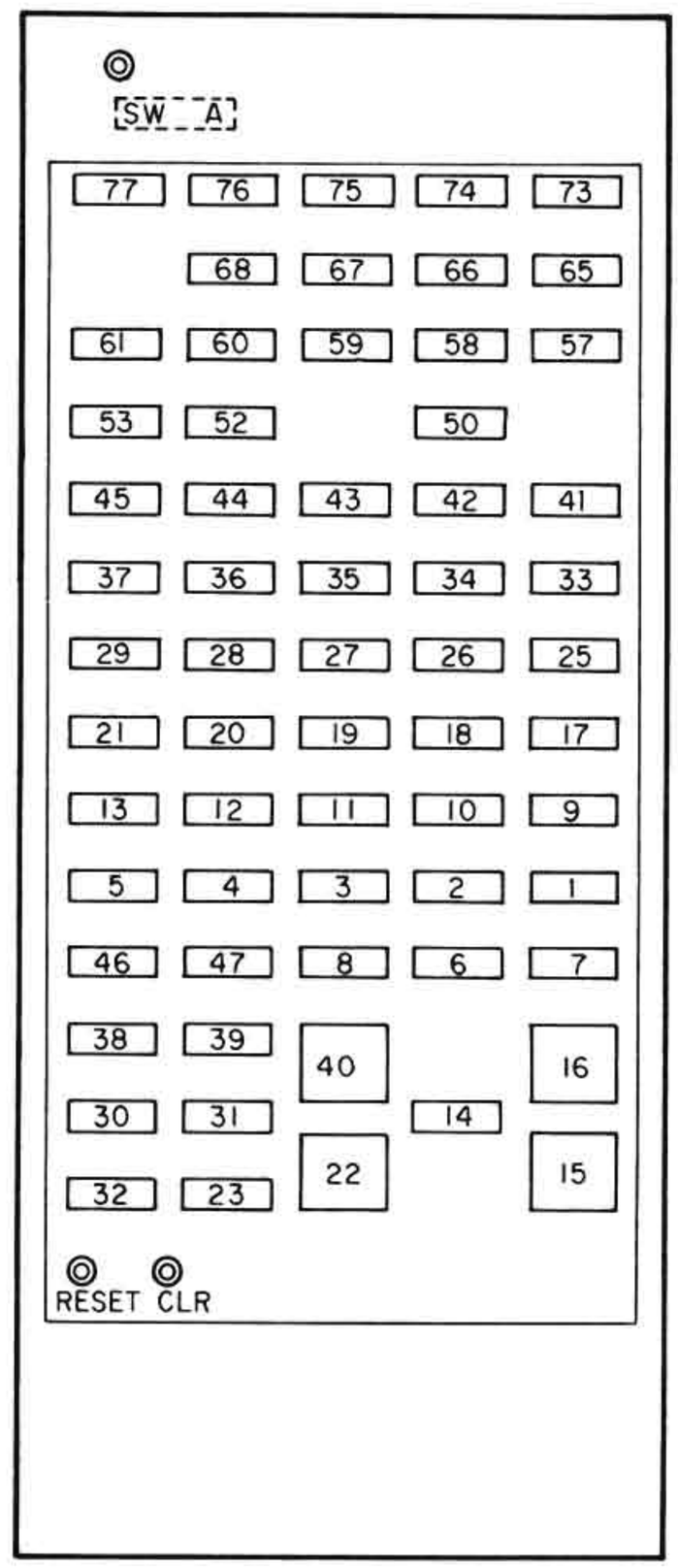

Key No.	CONTROL CODE	FUNCTION
77	7A-1F	POWER
76	—	No initial value (TV)
75	—	No initial value (VCR)
74	—	No initial value (AUX)
73	7A-14	PHONO (INPUT)
68	7A-11	PRESET + (TUNER)
67	7A-10	PRESET – (TUNER)
66	7A-12	A/B/C/D/E
65	7A-16	TUNER (INPUT)
61	7A-0B	CD SKIP ⏮
60	7A-0A	CD SKIP ⏭
59	7A-09	PAUSE/STOP
58	7A-08	PLAY
57	7A-15	CD (INPUT)
53	7A-0D	SEARCH ◀◀
52	7A-0C	SEARCH ▶▶
50	7A-4F	DISK SKIP
44	7C-5B	LD STOP
43	7C-04	LD PAUSE/STOP
42	7C-05	LD PLAY
41	7A-17	LD (INPUT)

Key No.	CONTROL CODE	FUNCTION
37	7C-02	LD CHAPTER –
36	7C-03	LD CHAPTER +
35	7C-06	LD SEARCH ◀◀
34	7C-07	LD SEARCH ▶▶
33	7A-54	VCR 1 (INPUT)
29	7A-06	DECK A/B
28	7C-13	LD DISPLAY
27	7C-0A	LD STILL ⏮
26	7C-0B	LD STILL ⏭
25	7A-13	VCR 2 (INPUT)
21	7A-04	TAPE REC/PAUSE
20	7A-07	TAPE DIR A
19	7A-00	TAPE PLAY
18	7A-40	TAPE DIR B
17	7A-18	TAPE 1 (INPUT)
13	7A-05	TAPE REC MUTE
12	7A-01	TAPE ◀◀
11	7A-03	TAPE STOP
10	7A-02	TAPE ▶▶
9	7A-19	TAPE 2 (INPUT)
5	—	No initial value (1)

Key No.	CONTROL CODE	FUNCTION
4	—	No initial value (2)
3	—	No initial value (3)
2	—	No initial value (4)
1	—	No initial value (5)
46	—	No initial value (6)
47	—	No initial value (7)
8	—	No initial value (8)
6	—	No initial value (9)
7	—	No initial value (10)
38	—	No initial value (A)
39	—	No initial value (B)
40	—	No initial value (▲)
16	7A-1A	MASTER VOL +
30	—	No initial value (C)
31	—	No initial value (D)
14	7A-1C	MUTING
32	—	No initial value (E)
23	—	No initial value (F)
22	—	No initial value (▼)
15	7A-1B	MASTER VOL –

REMOTE CONTROL TRANSMITTER
A, B, G models

■ SCHEMATIC DIAGRAM

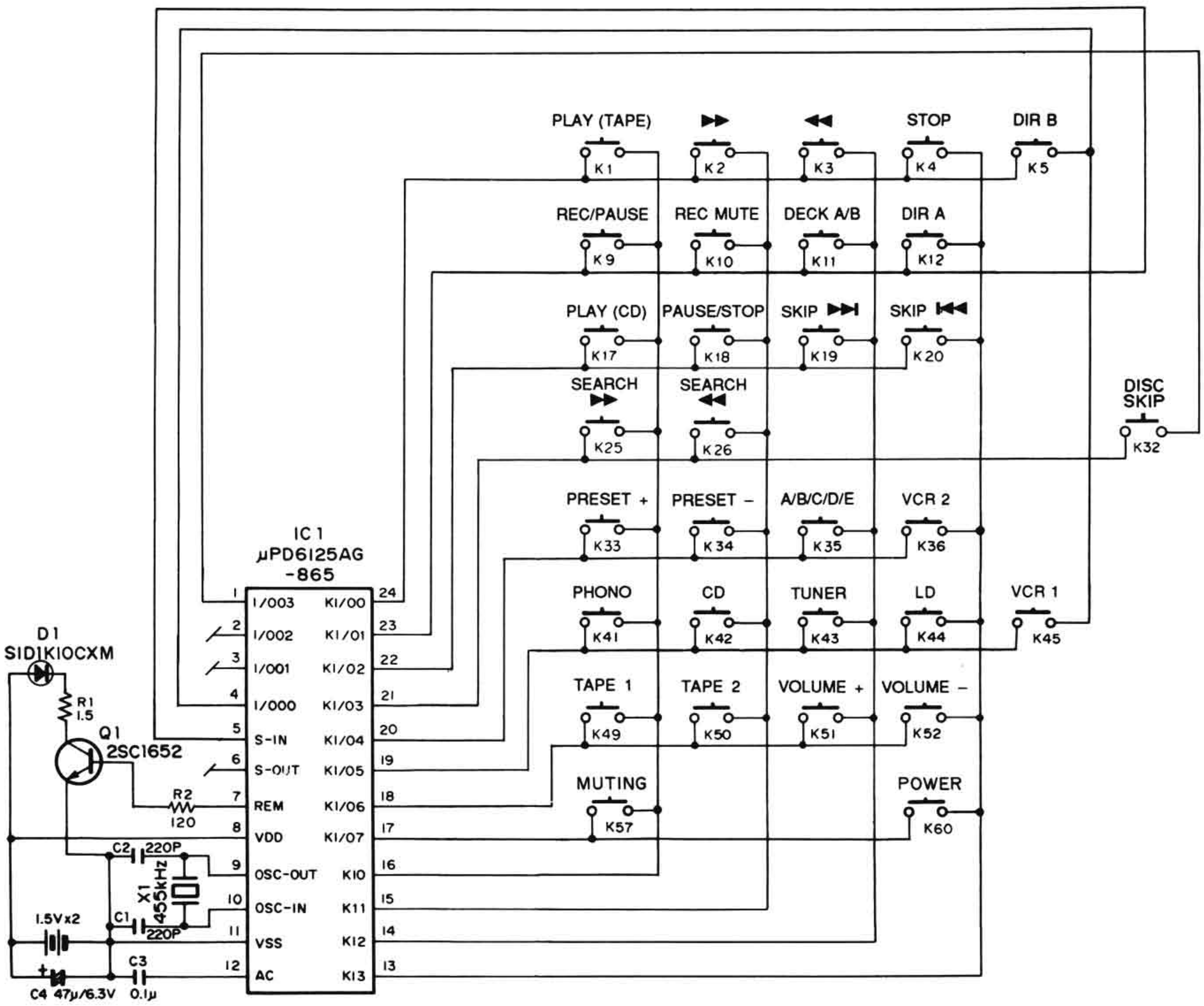

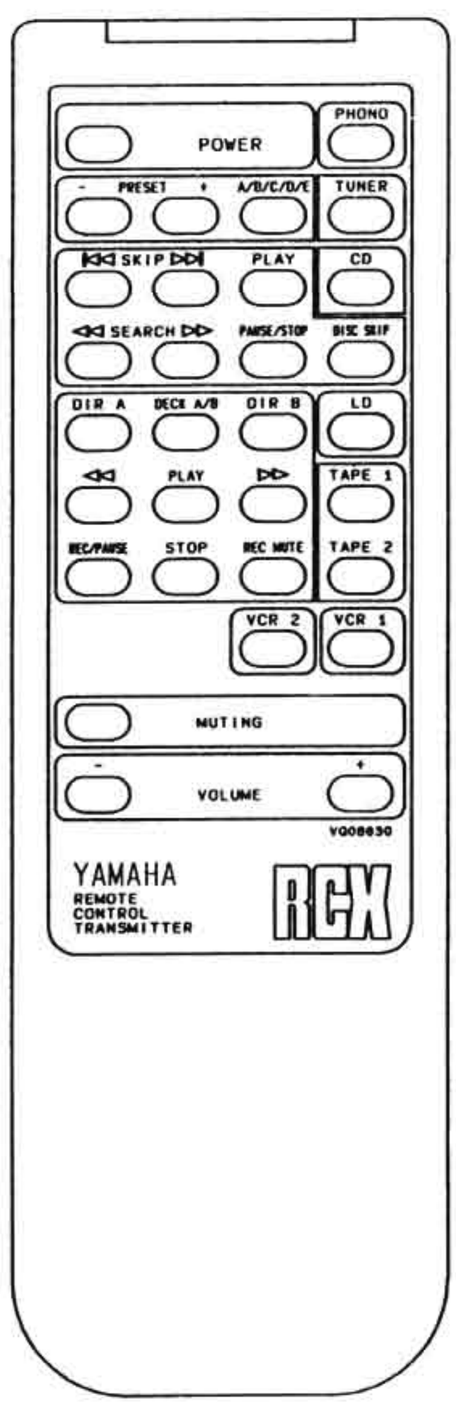

Key No.	CUSTAOM (HEX)	DATA (HEX)	FUNCTION
1	7A	00	PLAY (TAPE)
2	7A	01	◀◀ (TAPE)
3	7A	02	▶▶ (TAPE)
4	7A	03	STOP (TAPE)
5	7A	40	DIR B (TAPE)
9	7A	04	REC/PAUSE (TAPE)
10	7A	05	REC MUTE (TAPE)
11	7A	06	DECK A/B (TAPE)
12	7A	07	DIR A (TAPE)
17	7A	08	PLAY (CD)
18	7A	09	PAUSE/STOP (CD)
19	7A	0A	SKIP ▶▶I (CD)
20	7A	0B	SKIP I◀◀ (CD)
25	7A	0C	SERCH ▶▶ (CD)
26	7A	0D	SERCH ◀◀ (CD)
32	7A	4F	DISC SKIP (CD)
33	7A	10	PRESET + (TUNER)
34	7A	11	PRESET – (TUNER)
35	7A	12	A/B/C/D/E (TUNER)
36	7A	13	VCR 2 (INPUT)
41	7A	14	PHONO (INPUT)
42	7A	15	CD (INPUT)
43	7A	16	TUNER (INPUT)
44	7A	17	LD (INPUT)
45	7A	54	VCR 1 (INPUT)
49	7A	18	TAPE 1 (INPUT)
50	7A	19	TAPE 2 (INPUT)
51	7A	1A	VOLUME +
52	7A	1B	VOLUME –
57	7A	1C	MUTING
60	7A	1F	POWER

Parts List for Carbon Resistors

Value	1/4W Type Part No.	1/6W Type Part No.	Value	1/4W Type Part No.	1/6W Type Part No.
1.0 Ω	HJ35 3100	HF85 3100	10 kΩ	HF45 7100	HF45 7100
1.8 Ω	HJ35 3180	*	11 kΩ	HF45 7110	HF45 7110
2.2 Ω	HJ35 3220	HF85 3220	12 kΩ	HJ35 7120	HF85 7120
3.3 Ω	HJ35 3330	HF85 3330	13 kΩ	HF45 7130	HF45 7130
4.7 Ω	HJ35 3470	HF85 3470	15 kΩ	HF45 7150	HF45 7150
5.6 Ω	HJ35 3560	HF85 3560	18 kΩ	HF45 7180	HF45 7180
10 Ω	HF45 4100	HF45 4100	22 kΩ	HF45 7220	HF45 7220
15 Ω	HJ35 4150	HF85 4150	24 kΩ	HF45 7240	HF45 7240
22 Ω	HF45 4220	HF45 4220	27 kΩ	HJ35 7270	HF85 7270
27 Ω	HJ35 4270	HF85 4270	30 kΩ	HF45 7300	HF45 7300
33 Ω	HF45 4330	HF45 4330	33 kΩ	HF45 7330	HF45 7330
39 Ω	HJ35 4470	HF85 4390	36 kΩ	HF45 7360	HF45 7360
47 Ω	HF45 4470	HF45 4470	39 kΩ	HF45 7390	HF45 7390
56 Ω	HF45 4560	HF45 4560	47 kΩ	HF45 7470	HF45 7470
68 Ω	HF45 4680	HF45 4680	51 kΩ	HF45 7510	HF45 7510
75 Ω	HF45 4750	HF45 4750	56 kΩ	HF45 7560	HF45 7560
82 Ω	HF45 4820	HF45 4820	62 kΩ	HF45 7620	HF45 7620
91 Ω	HF45 4910	HF45 4910	68 kΩ	HF45 7680	HF45 7680
100 Ω	HF45 5100	HF45 5100	82 kΩ	HF45 7820	HF45 7820
110 Ω	HJ35 5110	HF85 5110	91 kΩ	HF45 7910	HF45 7910
120 Ω	HF45 5120	HF45 5120	100 kΩ	HF45 8100	HF45 8100
150 Ω	HF45 5150	HF45 5150	110 kΩ	HF45 8110	HF45 8110
160 Ω	HJ35 5160	*	120 kΩ	HF45 8120	HF45 8120
180 Ω	HF45 5180	HF45 5180	150 kΩ	HF45 8150	HF45 8150
200 Ω	HF45 5200	HF45 5200	180 kΩ	HF45 8180	HF45 8180
220 Ω	HF45 5220	HF45 5220	220 kΩ	HJ35 8220	HF85 8220
270 Ω	HF45 5270	HF45 5270	270 kΩ	HF45 8270	HF45 8270
330 Ω	HF45 5330	HF45 5330	300 kΩ	HF45 8300	HF45 8300
390 Ω	HF45 5390	HF45 5390	330 kΩ	HF45 8330	HF45 8330
430 Ω	HF45 5430	HF45 5430	390 kΩ	HJ35 8390	HF85 8390
470 Ω	HF45 5470	HF45 5470	470 kΩ	HF45 8470	HF45 8470
510 Ω	HF45 5510	HF45 5510	560 kΩ	HJ35 8560	HF85 8560
560 Ω	HF45 5560	HF45 5560	680 kΩ	HJ35 8680	HF85 8680
680 Ω	HF45 5680	HF45 5680	820 kΩ	HJ35 8820	HF85 8820
820 Ω	HF45 5820	HF45 5820	1.0 MΩ	HF45 9100	HF45 9100
910 Ω	HF45 5910	HF45 5910	1.2 MΩ	HJ35 9120	*
1.0 kΩ	HF45 6100	HF45 6100	1.5 MΩ	HJ35 9150	HF85 9150
1.2 kΩ	HF45 6120	HF45 6120	1.8 MΩ	HJ35 9180	HF85 9180
1.5 kΩ	HF45 6150	HF45 6150	2.2 MΩ	HJ35 9220	HF85 9220
1.8 kΩ	HF45 6180	HF45 6180	3.3 MΩ	HJ35 9330	HF85 9330
2.0 kΩ	HJ35 6200	HF85 6200	3.9 MΩ	HJ35 9390	*
2.2 kΩ	HF45 6220	HF45 6220	4.7 MΩ	HJ35 9470	HF85 9470
2.4 kΩ	HJ35 6240	HF85 6240			
2.7 kΩ	HF45 6270	HF45 6270			
3.0 kΩ	HF45 6300	HF45 6300			
3.3 kΩ	HF45 6330	HF45 6330			
3.6 kΩ	HJ35 6360	HF85 6360			
3.9 kΩ	HF45 6390	HF45 6390			
4.7 kΩ	HF45 6470	HF45 6470			
5.1 kΩ	HF45 6510	HF45 6510			
5.6 kΩ	HF45 6560	HF45 6560			
6.8 kΩ	HF45 6680	HF45 6680			
8.2 kΩ	HF45 6820	HF45 6820			
9.1 kΩ	HF45 6910	HF45 6910			

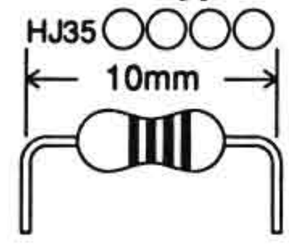

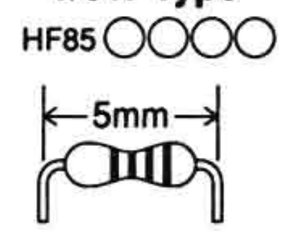

1992